DM ROMA
CONSULTING ENGINEERS

June 19, 2018

Renee Carter, Code Enforcement Officer
Town of Naples
PO Box 1757
Naples, Maine 04055

Re: Major Site Plan Application
Self Storage Units – 215 Roosevelt Trail, Naples
Old Sour Holdings, LLC, Applicant/Owner

Dear Ms. Carter and Planning Board:

On behalf of our client, Old Sour Holdings, LLC please find the enclosed Major Site Plan submission for a proposed Self Storage facility. The property is located at 215 Roosevelt Trail and is identified as Lot 12 on the Town of Naples Assessor's Map U-5. The 4.3± acre parcel is located partially in the Commercial District and is currently operated as the Black Bear Café and contains a single-story restaurant building, paved/gravel drives and parking, landscaping, a subsurface sewage disposal system and utilities typically associated with a restaurant use.

Development Description

The applicant intends to construct a self-storage facility on the project site consisting of two additional buildings measuring 6,000 square feet each for a total new building area of 12,000 square feet. Additional site improvements for the proposed project will include the construction of gravel/paved driveways and parking areas to facilitate access to each building, stormwater management facilities, and extension of electrical utilities for security lighting. The buildings will be pre-fabricated steel construction on concrete slabs.

Utilities

The project site presently contains a subsurface sewage disposal system utilized for the restaurant. We do not anticipate that the proposed buildings will require plumbing or water service. Electrical service will be extended to each building for the installation of security lighting and will be installed underground.

Stormwater Management

The property drains to the Crooked River and is located in the watershed of Sebago Lake. The project design includes the installation of stormwater management facilities in accordance with stormwater quality and quantity control standards required by the Town and the Maine

Department of Environmental Protection. We have prepared a Stormwater Management Report that outlines the specific measures taken to control Phosphourus Export from the project to meet the export budget for the project site. This is accomplished primarily through the construction of a stormwater infiltration basin. We have also detailed erosion control measures to be implemented during construction and following completion of the project, including a recommended maintenance schedule.

This initial project phase will result in site disturbance of approximately 0.95 acres of land and will create approximately 30,260 square feet of new impervious surface. The proposed project phase is scaled down from the plan that was presented as a Sketch Plan to the Planning Board in April and does not require permitting from the Maine DEP or other state/federal regulatory agencies.

If you have any questions, comments or require any further information, please don't hesitate to contact us. We look forward to working with Town staff and the Planning Board on this project.

Sincerely,

DM ROMA CONSULTING ENGINEERS

Dustin Roma

Dustin M. Roma, P.E.
President

Cc: Old Sour Holdings, LLC, Applicant
Enc.

TOWN OF NAPLES
PLANNING BOARD APPLICATION

P.O. Box 1757, Naples, Maine 04055
Phone: (207) 693-6364 / Fax: (207) 693-3667
www.townofnaples.org

Major Site Plan Review Application

Date: 6-19-2018

Owner/Applicant Name: OLD SOUR HOLDINGS, LLC

Mailing Address: 79 LEWIS ROAD, NAPLES, ME 04055

Telephone: _____ Email: _____

Property Owner: SAME AS APPLICANT

Property Location: 215 ROOSEVELT TRAIL Map & Lot: MAP U-05, LOT 12

Any easements, covenants, or deed restrictions related to the property? NONE KNOWN

Zoning District: COMMERCIAL Waivers requested: NONE

A list must be submitted for waivers

Name, address, & phone # of applicants engineer, land surveyor or planner: _____

DUSTIN ROMA, DM ROMA CONSULTING ENGINEERS, PO BOX 1116, WINDHAM, ME 04062

The undersigned, being the applicant, owner or legally authorized representatives, states that all information contained in this application is true and correct to the best of his/her knowledge and hereby does submit the information for review by the Town and in accordance with applicable ordinances, statues, and regulation of the Town, State and Federal governments.

Date: 6-19-18 Signature: Dustin Roma AGENT

Fee Schedule:

Advertising: $50.00
Fee per abutter: $7.00
Under 1,000 sq. ft. gross floor area: $300.00
1,000 – 10,000 sq. ft. gross floor area: $400.00
Over 10,000 sq. ft. gross floor area: $400.00
**Plus $25.00 for each 1,000 sq. ft. over 10,000
Development without building: $400.00
Modification of approved plan: $100.00
Commercial Initial permit: $100.00
Commercial Annual Renewal: $50.00

Aquatic Structure (non commercial): $50.00
Review Escrow: TBD

Applicants Total: $_____

Please include 9 copies of all supporting documents, including a letter of intent, when submitting your application to the Town Secretary. Completed applications should be received 21 days before the meeting date.

A formal application for Site Plan Review shall contain at least the following exhibits and information:

A fully executed and signed copy of the application for Site Plan Review; and, **9 copies** of a site plan drawn at a scale sufficient to allow review of the items listed under Criteria and Standards, but not more than one hundred (100) feet to the inch for that portion of the total tract of land being proposed for development, and showing the following:

- Owner's name, address and signature.
- The Tax Map and Lot of all abutting property owners plus a description of the project, to be used by the Planning Board to notify the abutters by certified mail of the proposed project, proof of mailing receipts to be kept on file at the Town Office. Owners of abutting properties shall be those listed in the most recent tax records of the Town of Naples.
- Perimeter survey of the parcel made and certified by a registered land surveyor relating to reference points showing true north point, graphic scale, corner of parcel, date of survey and total acreage.
- Total area of any land within 500 feet of the proposed project which is owned by the applicant.
- Zoning classifications(s) of the property and the location of zoning district boundaries if the property is located in two or more zoning districts.
- Soil types and location of soil boundaries as certified by a registered engineer or certified soil scientist.
- The location of all building setbacks as required by the Town Ordinances.
- The location, size and character of all signs and exterior lighting.
- The lot area of the parcel, street frontage and the Town Ordinances requirements for minimum lot size and frontage.
- The location of all existing and proposed buildings (including size and height), driveways, sidewalks, parking spaces, loading areas, open spaces, large trees, open drainage courses, signs, exterior lighting, service areas, easements and landscaping.
- The location of all buildings within fifty (50) feet of the parcel to be developed and the location of intersecting roads or driveways within 200 feet of the parcel.
- Existing and proposed topography of the site at two (2) foot contour intervals if major changes to the existing topography are being proposed.
- All surface water features within 500 feet of the project boundaries, including perennial streams and wetlands.
- Location and dimensions of on-site pedestrian and vehicular access ways, parking areas, loading and unloading facilities, design of entrances and exits of vehicles to and from the site on to public streets, curb and sidewalk.
- Location of all wells and septic systems within 150 feet of the property boundary.
- Existing land cover and vegetation conditions.
- Drainage plan to describe the location and size of road culverts, road drainage ditches, phosphorus and runoff control measures and other similar features.
- If the site is not to be served by a public sewer line, then an on-site soils investigation report by a Department of Human Services licensed site evaluator shall be provided.
- A list of waivers of any town requirements or ordinance provisions requested.

Please include 9 copies of all supporting documents, including a letter of intent, when submitting your application to the Town Secretary. Completed applications should be received 21 days before the meeting date.

- A statement from the Fire Chief that the property is accessible by present fire apparatus and detailing any additional on-site fire protection facilities required.
- A soil and erosion control plan approved by the Cumberland County Soil & Water Conservation District.
- Phosphorus Analysis.
- A utility plan showing provisions for water supply and waste water disposal including the size and location of all piping, holding tanks, leachfield, etc.
- Building plans showing plans of al floors and all elevations.
- Copies of any proposed or existing easements, covenants and deed restrictions.
- A description and design of proposed temporary and permanent signs, including location, size and lighting.
- Copies of all required s state approvals and permits, provided however, that the PlanningBoard may approve site plans subject to the influence of specific state licenses and permits in cases where it is not feasible for the applicant to obtain at the time of Site Plan Review.

The Planning Board may waive any of these requirements when the Board determines that the scale or nature of the project is of a size that makes the information unnecessary.

For a complete review of requirements for a Site Plan Review please refer to the Town of Naples Site Plan Review Ordinance which can be viewed at www.townofnaples.org.

Please include 9 copies of all supporting documents, including a letter of intent, when submitting your application to the Town Secretary. Completed applications should be received 21 days before the meeting date.

119

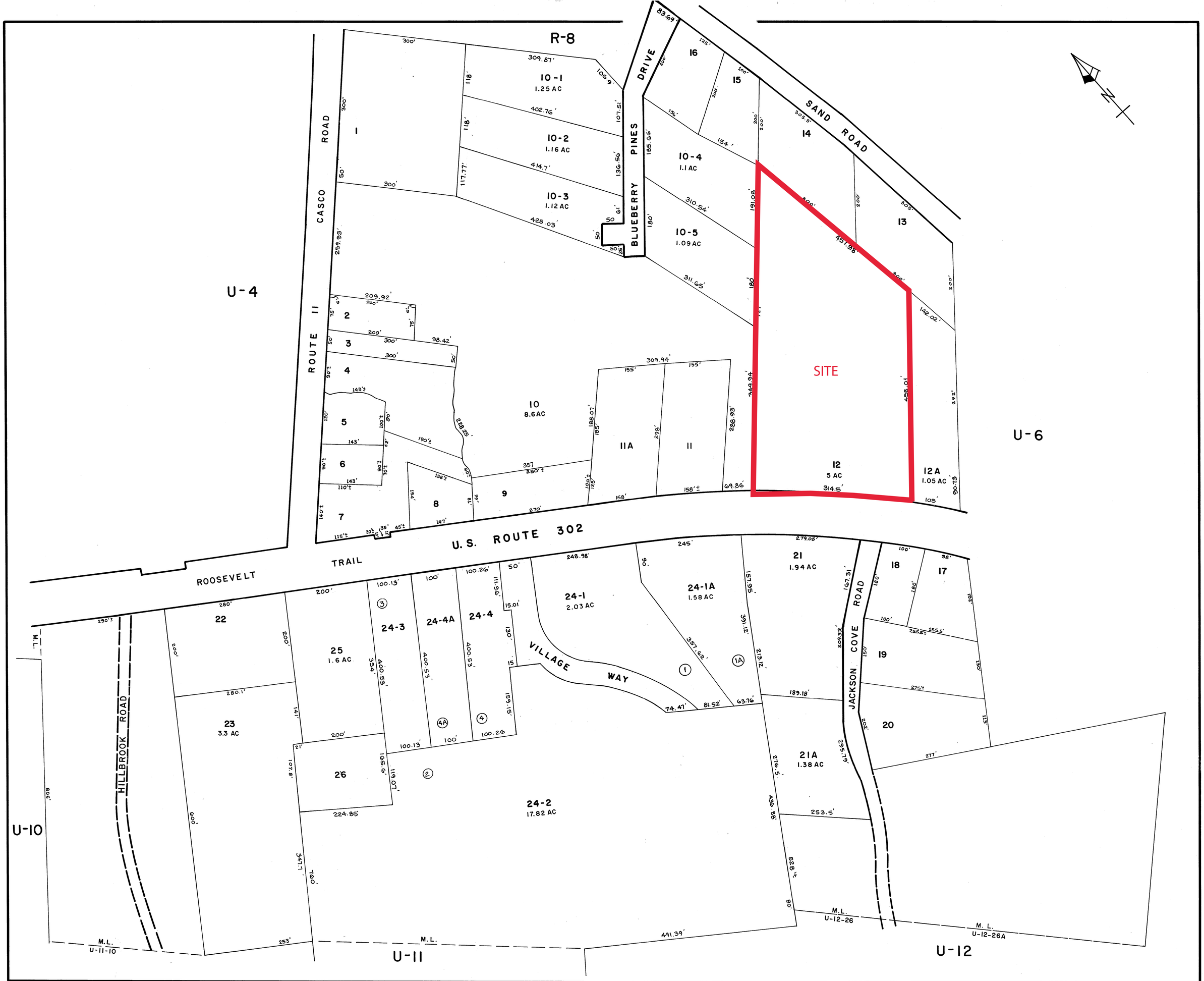

JOHN E. O'DONNELL & ASSOCIATES
AUBURN, MAINE
1969 1979

FOR ASSESSMENT PURPOSES ONLY
NOT FOR PROPERTY CONVEYANCES

PROPERTY MAP

NAPLES, MAINE

0 100 200
SCALE IN FEET

U - 5

MAINE REAL ESTATE TAX PAID

WARRANTY DEED

KNOW ALL MEN BY THESE PRESENTS, That **KCB 2, LLC**, a limited liability company with a place of business in Naples, County of Cumberland and State of Maine;

For consideration paid, grant to: **OLD SOUR HOLDINGS, LLC,** a Maine Limited Liability Company with a place of business at Naples, Maine

Whose mailing address is: 79 Lewis Road, Naples, ME 04055

With warranty covenants the land in Naples, County of Cumberland and State of Maine, described as follows:

See Exhibit A attached hereto and incorporated herein by reference.

WITNESS my hand and seal this 29th day of the month of March, 2004.

Signed, Sealed and Delivered
In presence of

KCB 2, LLC

WITNESS

BY:
ITS

STATE OF MAINE
CUMBERLAND, ss.

March 29, 2004

Then personally appeared before me the above-named KCB 2, LLC and acknowledged the foregoing instrument to be his free act and deed.

Before me,

~~NOTARY PUBLIC~~/ATTORNEY AT LAW
Printed Name:
Robert Nesult Esq

EXHIBIT A

With warranty covenants, a certain lot or parcel of land with the buildings thereon, situated on the northeasterly side of the Bridgton Road (U.S. Route 302) in the Town of Naples, County of Cumberland and State of Maine, bounded and described as follows:

Beginning at a 1-¼ inch iron pin located on the northerly side of U.S. Route 302 said iron pin also marking the corner bound of land now or formerly of Scothorne (Cumberland County Registry of Deeds, Book 7558, Page 154);

Thence N 49° 02' 32" E a distance of 727.00 feet to a 1 ½ inch pin at land now or formerly of Libby and Gray (Book 12938, Page 245);

Thence S 1° 18' 38" W a distance of 588.91 feet to a 1 ¼ inch iron pin at land now or formerly of Edwards (Book 3346, Page 137);

Thence S 51° 28' 11" W a distance of 292 feet to an iron pin located on a stone wall;

Thence S 54° 45' 51" W a distance of 90.73 feet to an iron pin on the northerly side of U.S. Route 302;

Thence in a generally northwesterly direction along the northeasterly bound of U.S. Route 302, to the iron pin marking the point of beginning; the last mentioned course being 418.01 feet along a curve, having a radius of 2,198.59 feet.

Premises described above are shown on a plan entitled "Standard Boundary Survey, Route 302, Naples, Maine for A.G. Associates, P.O. Box 455, Raymond, Maine 04071", prepared by A.A. Wylie, PLS 2013, dated November, 1998 and recorded in the Cumberland County Registry of Deeds.

Excepting and reserving herefrom the following described parcel which is being conveyed this date to Susan S. Sprague.

A certain lot or parcel of land located in the Town of Naples, County of Cumberland and State of Maine being more specifically bounded and described as follows:

Beginning at a drill hole located on the northeasterly sideline of Route 302. The said drill hole being set at the northwesterly corner of land now or formerly of Edwards as described in the Cumberland County Registry of Deeds Book 3346, Page 137.

Thence, from the point of beginning, northwesterly along said Route 302, and following a curve to the left, an arc distance of 105.00 feet, (said curve having a radius of 2198.59') to a point.

Thence, North 58 - 21 -11 East, across land of the grantor a distance of 458.01 feet to a point and land now or formerly of Proctor, as described in the Cumberland County Registry of Deeds Book 11421 Page 172.

Thence, South 1-18-38 West, along land of said Proctor, a distance of 142.02' to an iron pipe and land of said Edwards.

Thence, South 51 - 28 - 11 West, along the land of said Edwards, and following a partial stone wall, a distance of 292.00 feet to an angle point.

Thence, South 54 - 45 - 51 West, along lands of the said Edwards, and following a stone wall, a distance of 90,73 feet to the point of beginning.

Meaning an intending to describe a building lot conforming to the Town of Naples zoning requirements. The above described lot containing 45,600 square feet, more or less.

Being the same premises as described in a Warranty Deed of Kenneth C. Burnham, Sr. and Kenneth C. Burnham, Jr. to KCB 2, LLC dated February 25, 2000 and recorded on February 29, 2000 in the Cumberland County Registry of Deeds at Book 15343, Page 239.

Received
Recorded Register of Deeds
Mar 31,2004 12:19:16P
Cumberland County
John B OBrien

MAINE
Department of the Secretary of State
Bureau of Corporations, Elections and Commissions

Corporate Name Search

Information Summary

Subscriber activity report

This record contains information from the CEC database and is accurate as of: Mon Apr 30 2018 08:44:38. Please print or save for your records.

Legal Name	Charter Number	Filing Type	Status
OLD SOUR HOLDINGS, LLC	20042140DC	LIMITED LIABILITY COMPANY (DOMESTIC)	GOOD STANDING

Filing Date	Expiration Date	Jurisdiction
03/22/2004	N/A	MAINE

Other Names **(A=Assumed ; F=Former)**

NONE

Clerk/Registered Agent

THOMAS F. SMITH
P.O. BOX 98
HARRISON, ME 04040

Back to previous screen New Search

Click on a link to obtain additional information.

List of Filings	View list of filings	
Obtain additional information:		
Additional Addresses	Plain Copy	Certified copy
Certificate of Existence (more info)	Short Form without amendments ($30.00)	Long Form with amendments ($30.00)

You will need Adobe Acrobat version 3.0 or higher in order to view PDF files. Get Acrobat Reader

SUBSURFACE WASTEWATER DISPOSAL SYSTEM APPLICATION

Department of Human Services
Division of Health Engineering
(207) 287-5672 FAX (207) 287-4172

Town, City or Plantation	Street, Road or Subdivision	Name of Owner
Naples	Rte. 302	K. Burnham

SUBSURFACE WASTEWATER DISPOSAL PLAN

Scale: 1" = **20** Ft. or as shown

Page 3 Revision see note below

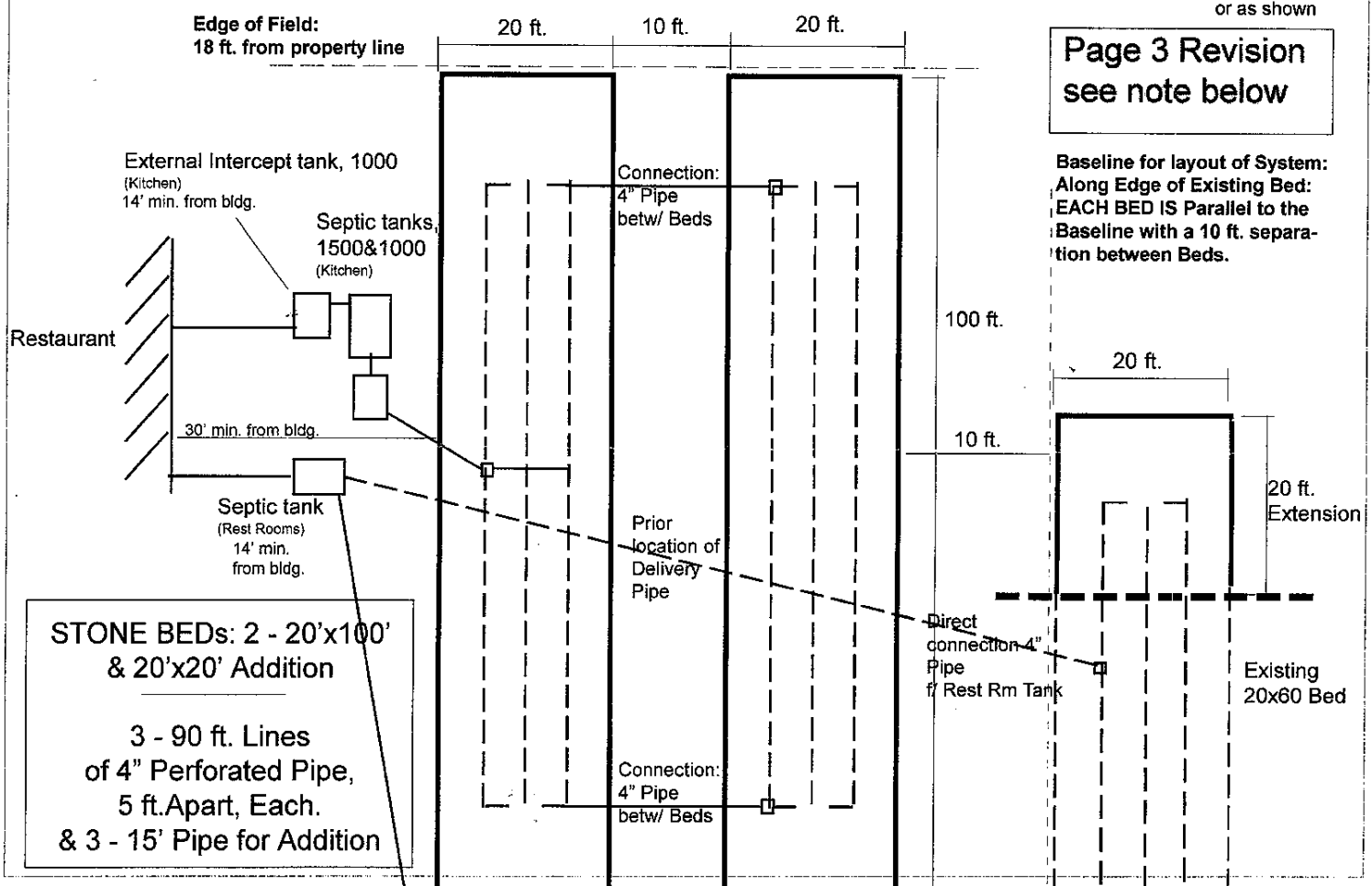

FILL REQUIREMENTS

Depth of Fill (Upslope) 0 "
Depth of Fill (Downslope) -17 +/-"

CONSTRUCTION ELEVATIONS

Finished Grade Elevation -30"
Top of Distribution Pipe or Proprietary Devices -43"
Bottom of Disposal Area -54"

ELEVATION REFERENCE POINT

Location & Description Spike in 5" Oak
Reference Elevation 01 @ 40" high

Construction Notes:

- The completed Disposal Field must comform to the above Fill Requirements. If the ERP and/or the field's layout is found not to correspond to Requirements on this page, notify the SE.
- Installer shall follow the construction techniques of the CODE (Section 800).

Backfill under & around the Disposal Field **with 8" min. of coarse or gravelly sand, some mixed into original soil beneath bed for transitional zone.**

DISPOSAL AREA CROSS SECTION

Scale:
Vertical: 1" = **5** Ft.
Horizontal: 1" = **10** Ft.

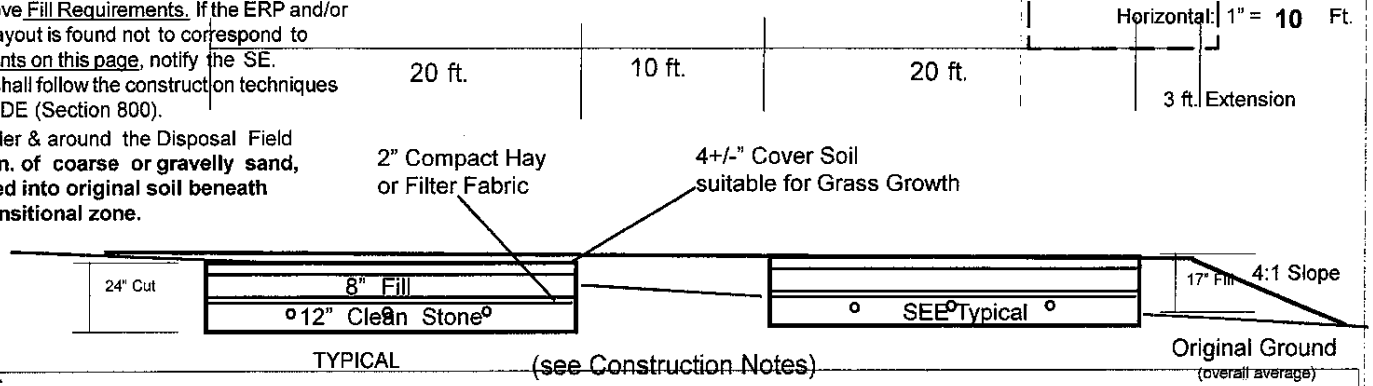

REVISION:
Letter (5/2/00) from L. Robinson, Sanitarian in Health Engineering, has mandated the revision. Said letter is attached to this Application and is an integral part of the same. The above revision complies with this mandate.
The S E, however, recommends the prior design to avoid pipe alignment contrary to Code Sect. 1402.6.3 and to prevent the real possibility of frost penetration in such a long, bending delivery pipe, and, if Code Sect. 1402.3 for watertight joints is complied with, the "potential channel" may not even be created.
W H 5/5/00

Site Evaluator Signature	SE #	Date	
	67	11 / 19 / 99	Page 3 of 3 HHE-200 Rev. 7/97

STATE OF MAINE
DEPARTMENT OF HUMAN SERVICES
DIVISION OF HEALTH ENGINEERING
10 STATE HOUSE STATION
AUGUSTA, MAINE
04333-0010

ANGUS S. KING, JR.
GOVERNOR

KEVIN W. CONCANNON
COMMISSIONER

May 2, 2000

Walter Horton SE
WH Civil Engineering
187 Middle Ridge Road
Bridgton ME 04409

SUBJECT: Septic System Review, Miss Naples Diner (Burnham) property, Route 302, Naples

Dear Mr. Horton:

The Division has reviewed a septic system design for the subject property. The HHE-200 is designed for a 60-seat restaurant serving three meals per day using conventional service. The design proposes an expansion of the existing disposal field for the restrooms and two disposal areas for the kitchen portion of the restaurant.

The system design is not in compliance with the Maine Subsurface Wastewater Disposal Rules due to the distribution pipe running through the middle of the two new disposal fields to a d-box in the upper end of the restroom disposal field. The piping placed in such a manner creates a potential channel for the effluent to travel vertically rather than horizontally. The distribution pipe must be routed around the ends of the two new disposal areas and connected to a d-box relocated to the lower end of the restrooms disposal field (see attached mark-up).

Please revise Page 3 of 3 of the HHE-200 as indicated above and submit a copy of the revision to this office and to John Thompson, Local Plumbing Inspector for Naples. I have spoken with Mr. Thompson regarding this design change and he has been in contact with the contractor. Final approval of the septic system for the proposed restaurant will not be granted until the revision to the design has been completed and forwarded.

Should you or others have any questions regarding this review and/or approval, please feel free to contact me at 287-5687.

Sincerely,

Linda S. Robinson

Linda S. Robinson
Wastewater & Plumbing Control
Division of Health Engineering
E-mail: linda.robinson@state.me.us

/lsr
Enclosure
cc: Robert Peterson, E&L
Laurie Davis, District Sanitarian
John Thompson, LPI
Kenneth Burnham, Property Owner
James Jacobsen, Program Manager
Jay Hardcastle, State Site Evaluator

SUBSURFACE WASTEWATER DISPOSAL SYSTEM APPLICATION

Department of Human Services
Division of Health Engineering
(207) 287-4472 FAX (207) 287-4172

or Plantation: Naples

Street, Road or Subdivision: Rte. 302

Name of Owner: K. Burnham

SUBSURFACE WASTEWATER DISPOSAL PLAN

Scale: 1" = 20 Ft. or as shown

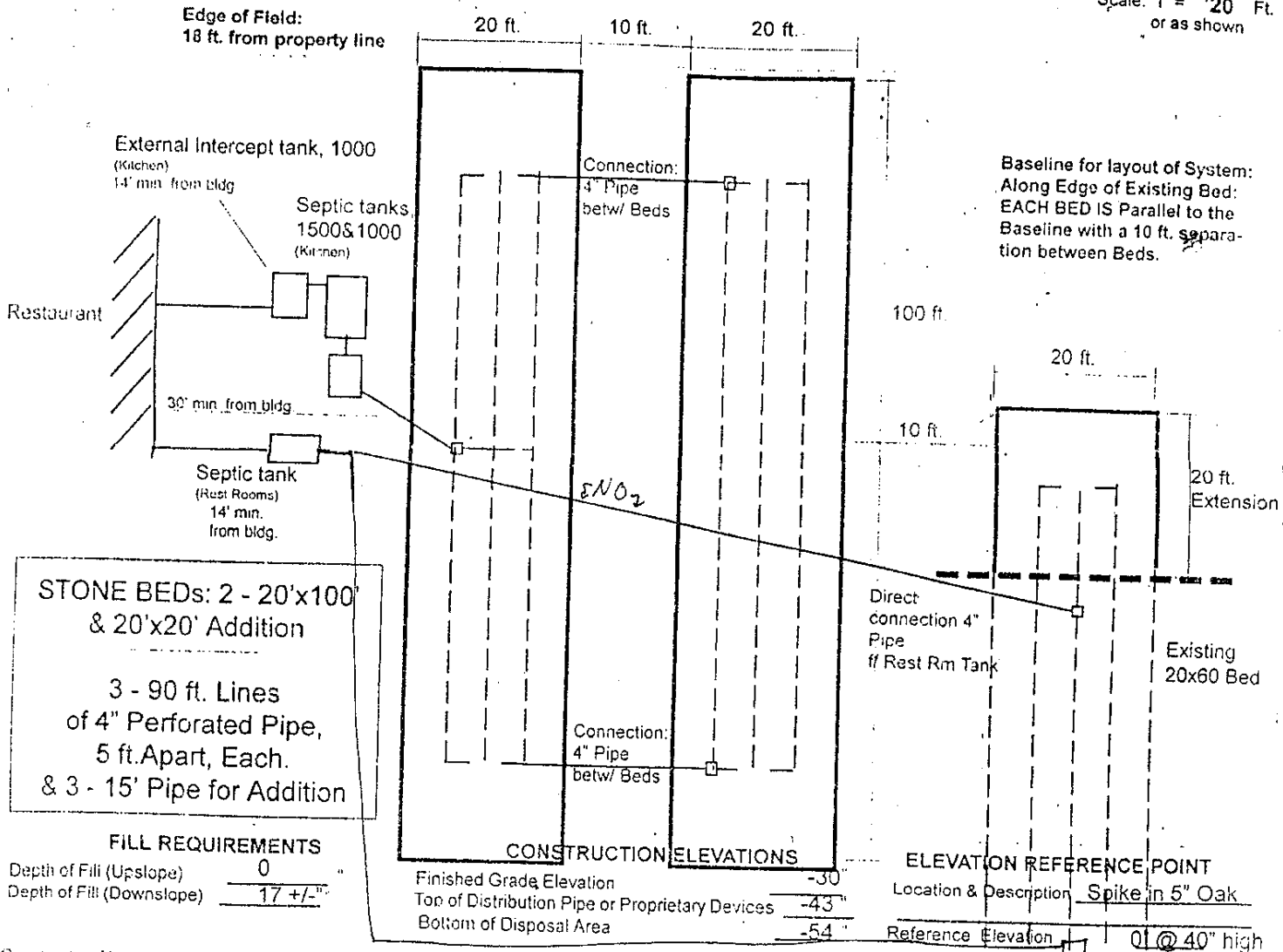

STONE BEDs: 2 - 20'x100' & 20'x20' Addition

3 - 90 ft. Lines of 4" Perforated Pipe, 5 ft.Apart, Each. & 3 - 15' Pipe for Addition

FILL REQUIREMENTS

Depth of Fill (Upslope) 0 "
Depth of Fill (Downslope) 17 +/- "

CONSTRUCTION ELEVATIONS

Finished Grade Elevation -30 "
Top of Distribution Pipe or Proprietary Devices -43 "
Bottom of Disposal Area -54 "

ELEVATION REFERENCE POINT

Location & Description: Spike in 5" Oak
Reference Elevation: 01 @ 40" high

Scale:
Vertical: 1" = 5 Ft
Horizontal: 1" = 10 Ft

Construction Notes

- The completed Disposal Field must comform to the above Fill Requirements. If the ERP and/or the field's layout is found not to correspond to Requirements on this page, notify the SE.
- Installer shall follow the construction techniques of the CODE (Section 800)

Back fill under & around the Disposal Field with 8" min. of coarse or gravelly sand. Some mixed into original soil beneath bed for transitional zone.

DISPOSAL AREA CROSS SECTION

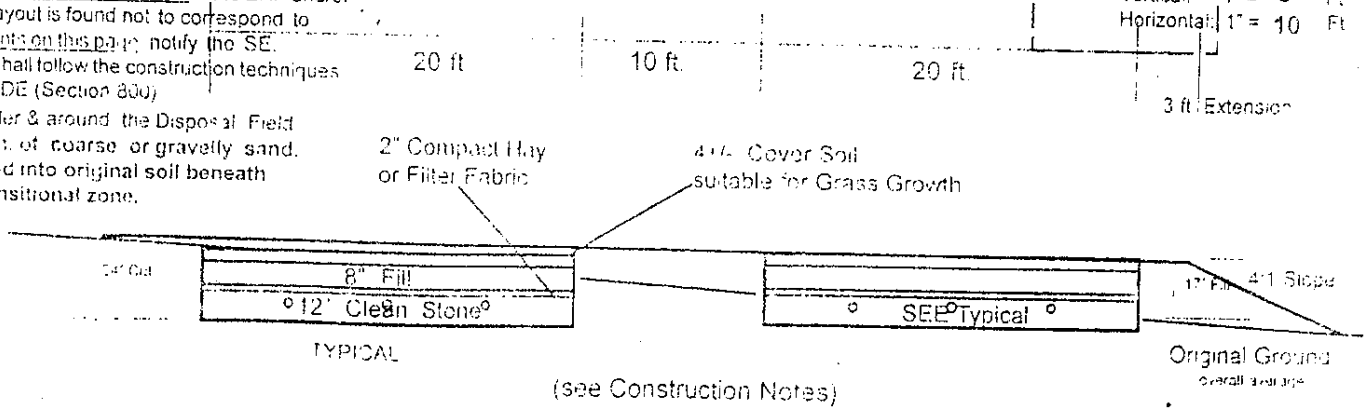

Site Evaluator Signature

67
SE #

11 / 19 / 99
Date

HHE-200 Rev. 7/97

SUBSURFACE WASTEWATER DISPOSAL SYSTEM APPLICATION

Department of Human Services
Division of Health Engineering, Station 10
(207) 287-5672 FAX (207) 287-4172

PROPERTY LOCATION

City, Town or Plantation	Naples
Street or Road	Rte. 302
Subdivision, Lot #	

PROPERTY OWNERS NAME

Name (last, first, MI): Burnham, Kenneth — [X] Owner [ ] Applicant

Mailing Address of [X] Owner [ ] Applicant: P O Box 338, Naples, ME. 04055

Daytime Tel. #: 207 693 6534

>> Cuation: Permit Required - Attach in Space Below <<

NAPLES 2303 TOWN COPY

Date Permit Issued: 11 / 24 / 99 — $ 100.00 FEE — [ ] If Double Fee Charged

Local Plumbing Insector Signature — L.P.I. # 834

Municipal Tax Map # U5 Lot # 12

Owner Statement

I state that the information submitted is correct to the best of my knowledge and understand that any falsification is reason for the Department and/or Local Plumbing Inspector to deny a Permit.

Signature of Owner or Applicant — Date 11-24-99

Caution: Inspection Required

I have inspected the installation authorized above and found it to be in compliance with the Subsurface Wastewater Disposal Rules Application.

(1st) Date Approved

Local Plumbing Inspector Signature

(2nd) Date Approved

PERMIT INFORMATION

THIS APPLICATION IS FOR:

1. [X] First Time System
2. [ ] Replacement System
   Type Replaced _____
   Year Installed _____
3. [ ] Expanded System
   [ ] a. One-Time exempted
   [ ] b. Non-exempted
4. [ ] Experimental System
5. [ ] Seasonal Conversion

THIS APPLICATION REQUIRES:

1. [X] No Rule Variance
2. [ ] First Time System Variance
   [ ] a. Local Plumbing Inspector Approval
   [ ] b. State & Local Plumbing Inspector Approval
3. [ ] Replacement System Variance
   [ ] a. Local Plumbing Inspector Approval
   [ ] b. State & Local Plumbing Inspector Approval
4. [ ] Minimum Lot Size Variance
5. [ ] Seasonal Conversion Variance

DISPOSAL SYSTEM COMPONENT(S)

1. [X] Non-Engineered System
2. [ ] Primitive System (graywater & Alt. toilet)
3. [ ] Alternitive Toilet, specify_____
4. [ ] Non-Engineered Treatment Tank
5. [ ] Holding Tank _____ Gallons
6. [ ] Non-Engineered Disposal Area (only)
7. [ ] Separated Laundry System
8. [ ] Engineered System (2000 gpd or more)
9. [ ] Engineered Treatment Tank (only)
10. [ ] Engineered Disposal Area (only)
11. [ ] Pretreatment, specify_____
12. [ ] Miscellaneous components

SIZE OF PROPERTY

5.5+/- [ ] sq. ft. [X] acres

SHORELAND ZONING

[ ] Yes [X] No

DISPOSAL SYSTEM TO SERVE:

1. [ ] Single Family Dwelling Unit, No. of Bedrooms_____
2. [ ] Multiple Family Dwelling, No. of Units _____
3. [X] Other: 60 seat, 3 meal conventional restaurant (SPECIFY)

TYPE OF WATER SUPPLY

1. [ ] Drilled Well 2. [ ] Dug Well 3. [ ] Private
4. [ ] Public 5. [ ] Other FUTURE

DESIGN DETAILS (SYSTEM LAYOUT SHOWN ON PAGE 3)

TREATMENT TANK

1. [X] Concrete
   [X] Regular
   [ ] Low Profile
2. [ ] Plastic
3. [ ] Other

1500 & 1000 Kitchen; 1000 Rest Rm
CAPACITY _____ gallons
1000 gal.Intercept tank

DISPOSAL FIELD TYPE & SIZE

1. [X] Stone Bed 2. [ ] Stone Trench
3. [ ] Proprietary Device
   a. [ ] Clustered c. [ ] Linear
   b. [ ] Regular d. [ ] H-20
4. [ ] Other _____

SIZE 5600 [X] sq. ft. [ ] lin. ft.
w/ 1200 sf existing

GARBAGE DISPOSAL UNIT

1. [ ] No 3. [ ] Maybe
2. [X] Yes >>Specify one below:
   a. [X] Multi-compartment tank
   b. [ ] Tank in service
   c. [ ] Increase in tank capacity
   d. [ ] Filter on tank outlet

DESIGN FLOW

1800 gallons per day

BASED ON:
1. [X] Table 501.1 (dwelling unit(s)
2. [X] Table 501.2 (other facilities)

SHOW CALCULATIONS
- for other facilities-

(see: page 2, Notes & factor calculation)

3. [ ] Section 503.0 (meter readings)
ATTACH WATER-METER DATA

SOIL DATA & DESIGN CLASS

PROFILE CONDITION DESIGN
4 / C / 1
at Observation Hole # 1
Depth 40 " Elevation -15 "
OF MOST LIMITING FACTOR

DISPOSAL AREA SIZING

1. [ ] Small 2.00
2. [X] Medium 2.60
3. [ ] Medium-Large 3.30
4. [ ] Large 4.10
5. [ ] Extra-Large 5.20

PUMPING

1. [ ] Not required
2. [X] May be required
3. [ ] Required >>Specify only for engineered or experimental systems

DOSE _____ Gallons

SITE EVALUATOR'S STATEMENT

I Certify that on 11 / 17 / 99 (date) I completed a site evaluation on this property and state that the data reported is accurate and that the proposed system is in compliance with the Subsurface Wastewater Disposal Rules (10-144A CMR 241).

Site Evaluator Signature — SE # 67 — Date 11 / 19 / 99

W. HORTON — Site Evaluator Name Printed — Telephone # 647- 8798

SUBSURFACE WASTEWATER DISPOSAL SYSTEM APPLICATION

Department of Human Services
Division of Health Engineering
(207) 287-5672 FAX (207) 287-4172

Town, City or Plantation	Street, Road or Subdivision	Name of Owner
Naples	Rte. 302	K. Burnham

SITE PLAN

Scale: 1" = **100** Ft. or as shown

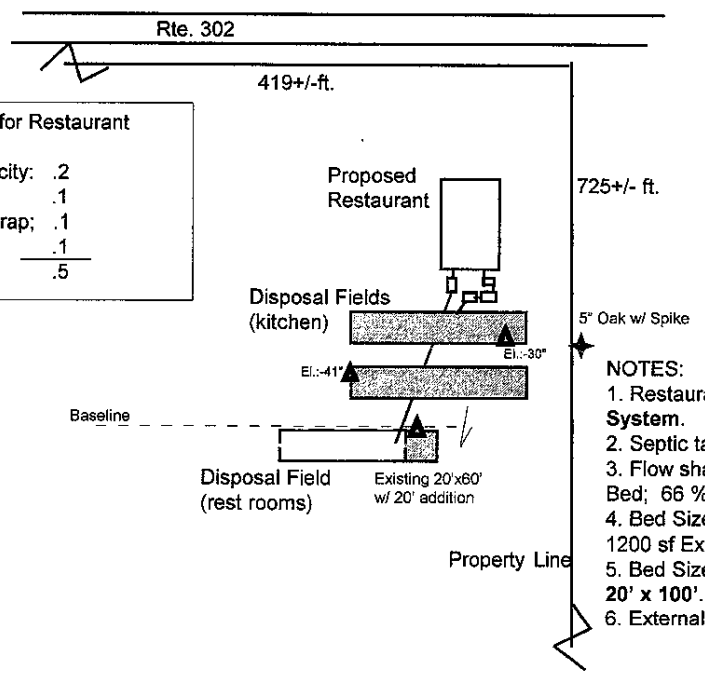

Adjustment Factor for Restaurant (table 501.2):

a) septic tank capacity:	.2
b) multiple tanks:	.1
c) external grease trap;	.1
d) filter:	.1
Deduction:	.5

SITE LOCATION PLAN
(Map from *The Maine Atlas* recommended)

Rte. 302

Opposite Jackson Cove Rd.

NOTES:
1. Restaurant (60 seats x 30gpds = 1800gpd. **Non Engineered System.**
2. Septic tank capacity: **3600gpd**. Use: 2-1000 gal. & 1-1500 gal tanks.
3. Flow shall be split: 33% of flow (600gpd) for Rest Rooms to Existing Bed; 66 % of flow (1200gpd) for Kitchen to new beds.
4. Bed Size for Rest Rooms: 600 x 2.6 = 1560 sf. OR: **add 400 sf** to 1200 sf Existing Bed.
5. Bed Size for Kitchen:1200 x 1.3(adj.) x 2.6 = 4056 sf OR: **2 beds of 20' x 100'.**
6. External Grease Intercept Tank Size: 60x4x2.5x2x.8 = **960 gal.**

= SLOPE
= E.R.P.
▲ = OBSERVATION PIT

SOIL DESCRIPTION AND CLASSIFICATION (Location of Observation Holes Shown Above)

Observation Hole _____ ☒ Test Pit ☐ Boring
1 " Depth of Organic Horizon Above Mineral Soil

Depth below mineral soil surface (inches)	Texture	Consistency	Color	Mottling
0–10		FILL: Dark Loam		
10–20	Loam		Dk. Br.	
20–30	Loamy Sand	Friable	Brown	None Evident
30–40			Lt. Brown	
40–50				

Soil Classification	Slope	Limiting Factor	
4 C Profile	4 %	40 "	☐ Ground Water ☐ Restrictive Layer ☐ Bedrock ☒ Pit Depth

Observation Hole _____ ☐ Test Pit ☐ Boring
_____ " Depth of Organic Horizon Above Mineral Soil

Depth below mineral soil surface (inches)	Texture	Consistency	Color	Mottling
0–50	All 3 Test Holes were substantially the same profile.			

Standard Notes:
- Owner of property shall review all setbacks and other information on this Application for correctness of fact, prior to submission to LPI
- The four corner flags for the disposal field are preliminary and general indicators of its general location. Installer shall use the layout on page 3 for construction layout of the field's location.
- SE's phone number is on page #1 for questions.
- Proper functioning of a disposal system requires Septic Tank being pumped out periodically. Non-pumping and today's liquid soaps, etc. reduce the life expectancy of a disposal field, causing clogging and needing replacement.
- Because installation and owner maintenance has a significant effect on the working order of an onsite sewage disposal system, including its components, it is not possible to adequately predict the efficiency and/or operation of the system.

Soil Classification	Slope	Limiting Factor	
Profile	%	"	☐ Ground Water ☐ Restrictive Layer ☐ Bedrock ☐ Pit Depth

Site Evaluator Signature	SE #	Date	
[signature]	67	11 / 20 / 99	Page 2 of 3 HHE-200 Rev. 7/97

SUBSURFACE WASTEWATER DISPOSAL SYSTEM APPLICATION

Department of Human Services
Division of Health Engineering
(207) 287-5672 FAX (207) 287-4172

Town, City or Plantation	Street, Road or Subdivision	Name of Owner
Naples	Rte. 302	K. Burnham

SUBSURFACE WASTEWATER DISPOSAL PLAN

Scale: 1" = **20** Ft. or as shown

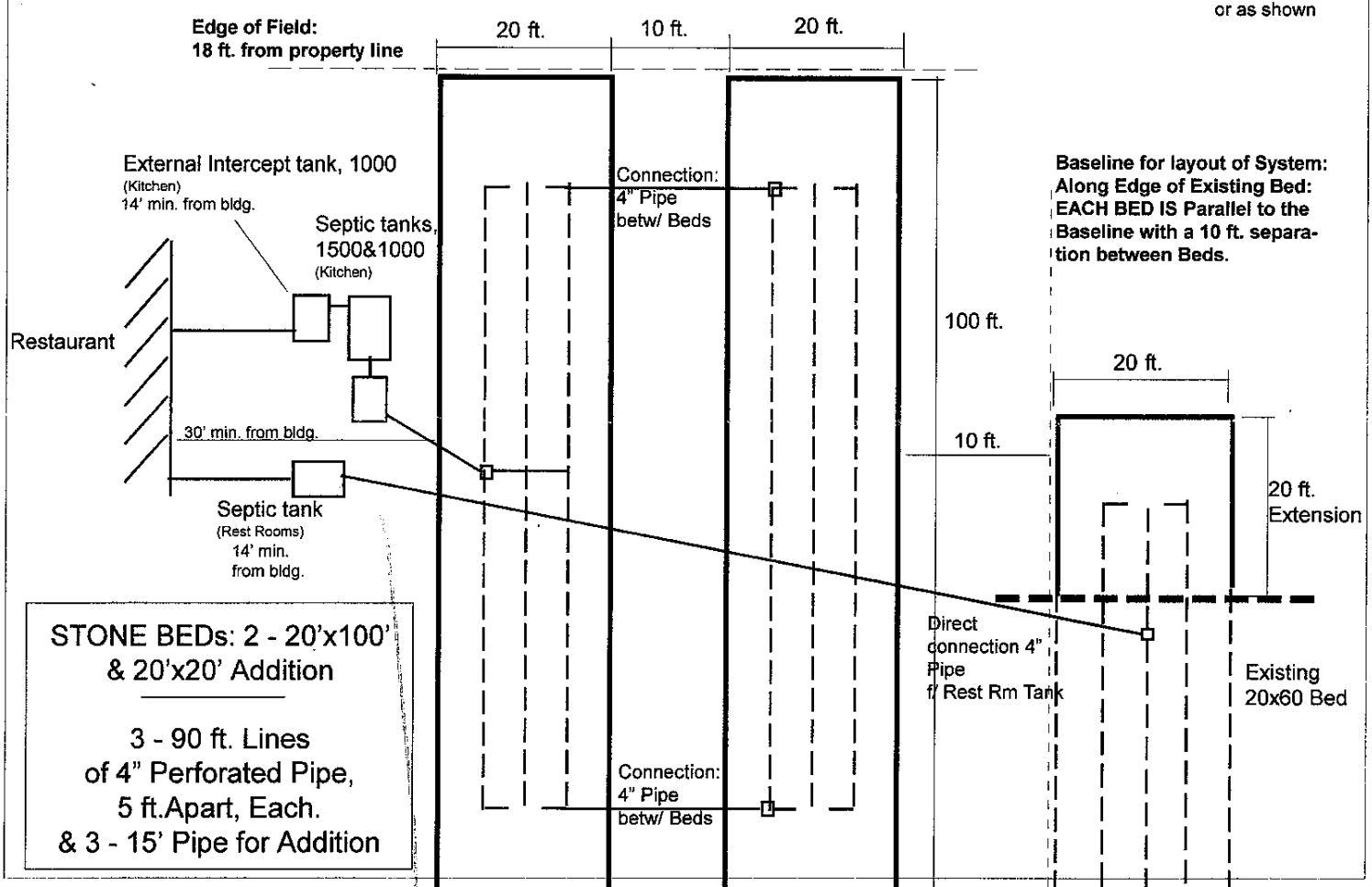

FILL REQUIREMENTS

Depth of Fill (Upslope) 0 "
Depth of Fill (Downslope) 17 +/-"

CONSTRUCTION ELEVATIONS

Finished Grade Elevation -30"
Top of Distribution Pipe or Proprietary Devices -43"
Bottom of Disposal Area -54"

ELEVATION REFERENCE POINT

Location & Description Spike in 5" Oak
Reference Elevation 01 @ 40" high

Construction Notes:

- The completed Disposal Field must comform to the above Fill Requirements. If the ERP and/or the field's layout is found not to correspond to Requirements on this page, notify the SE.
- Installer shall follow the construction techniques of the CODE (Section 800).

Backfill under & around the Disposal Field **with 8" min. of coarse or gravelly sand, some mixed into original soil beneath bed for transitional zone.**

DISPOSAL AREA CROSS SECTION

Scale:
Vertical: 1" = **5** Ft.
Horizontal: 1" = **10** Ft.

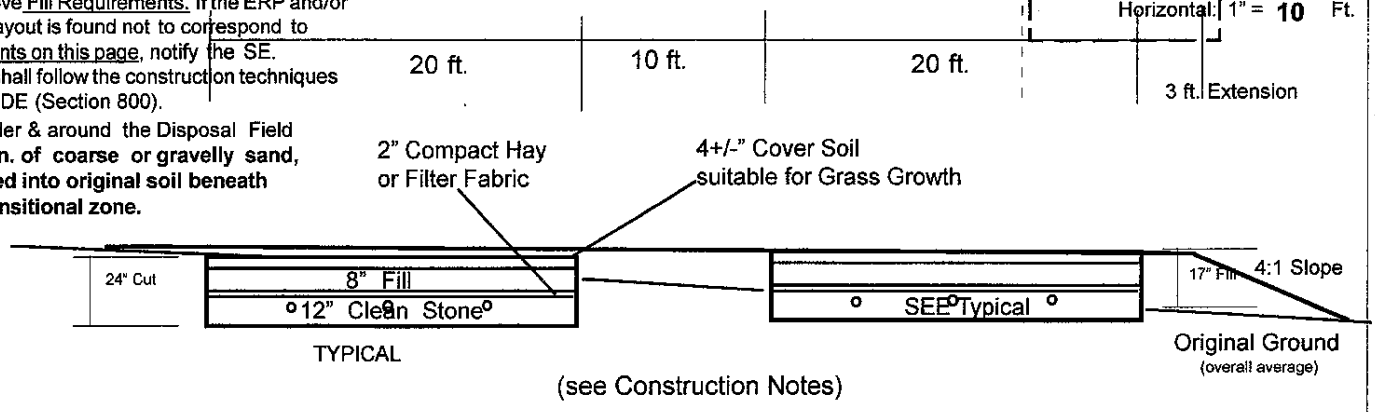

(see Construction Notes)

Site Evaluator Signature	SE #	Date	
	67	11 / 19 / 99	Page 3 of 3 HHE-200 Rev. 7/97

DM ROMA
CONSULTING ENGINEERS

STORMWATER MANAGEMENT REPORT

SELF-STORAGE FACILITY
ROOSEVELT TRAIL
NAPLES, MAINE

A. Narrative

Old Sour Holidings, LLC is proposing to develop a 4.3-acre parcel along Roosevelt Trail in Naples. The project site is identified as Lot 12 on the Town of Naples Assessors Map U-05 and is the location of the existing Black Bear Café. Most of the parcel is in the Commercial Zoning District, but a small portion in the rear of the property is within the Rural Zoning District.

The applicant intends to construct a self-storage facility on the project site consisting of two (2) 6,000 square foot structures (30' x 200'), for a total of 12,000 sf of additional building footprint. Additional site improvements for the proposed project will include the construction of gravel/paved driveways and parking areas to facilitate access to each building, stormwater management facilities, and extension of utilities typically associated with self-storage facilities to the proposed structures. The buildings will be pre-fabricated steel construction on concrete slabs.

B. Alterations to Land Cover

The 4.3-acre lot currently contains the Black Bear Café restaurant consisting of the single-story building, paved/gravel drives and parking, landscaping, a subsurface sewage disposal system and utilities typically associated with a restaurant use. The remaining portions of the site are undeveloped woods and remnants of an old gravel/sand pit. Since the proposed project will not disturb more than one (1) acre of land, the site does not require stormwater related permitting from the Maine Department of Environmental Protection (MDEP). The proposed development does require Site Plan approval from the Town of Naples Planning Board.

The proposed development will generate approximately 0.41± acres of new driveway and parking surface and 0.275± acres of new buildings for a total additional impervious area of approximately 0.685± acres and approximately 0.31± acres of new landscaping, resulting in a total developed area of 0.995± acres.

The site around the existing restaurant is relatively flat (1-5%) where the undeveloped land is steeper at slopes of 15% or greater. The site drains either southwesterly to Roosevelt Trail or northerly off the property. Runoff from the project site eventually drains to Sebago Lake. Soils on the property are indicated as Windsor loamy sand as depicted on the Medium Intensity Soil Maps for Cumberland County, Maine published by the Natural Resources Conservation Service. The soil within the proposed development is in the hydrologic soil group "A", as indicated on the

attached soils map. The soils boundaries and hydrologic soils group (HSG) designations are indicated on the Soils Map enclosed as Exhibit 1 of this report.

C. Methodology and Modeling Assumptions

The proposed stormwater management system has been designed utilizing Best Management Practices to maintain existing drainage patterns while providing stormwater quality improvement measures. The goal of the storm drainage system design is to remove potential stormwater pollutants from runoff generated by the development while providing attenuation of the peak rates of runoff leaving the site. The method utilized to predict the surface water runoff rates in this analysis is a computer program entitled HydroCAD, which is based on the same methods that were originally developed by the U.S. Department of Agriculture (USDA), Natural Resources Conservation Service, and utilized in the TR-20 modeling program. Peak rates of runoff are forecasted based upon land use, hydrologic soil conditions, vegetative cover, contributing watershed area, time of concentration, rainfall data, storage volumes of detention basins and the hydraulic capacity of structures. The computer model predicts the amount of runoff as a function of time, with the ability to include the attenuation effect due to dams, lakes, large wetlands, floodplains and constructed stormwater management basins. The input data for rainfalls with statistical recurrence frequencies of 2-, 10- and 25 years was obtained from Appendix H of the MDEP, Chapter 500 Stormwater Management, last revised in 2015. The National Weather Service developed four synthetic storm types to simulate rainfall patterns around the country. For analysis in Cumberland County, Maine, the type III rainfall pattern with a 24-hour duration is appropriate.

D. Basic Standards

The project is required by the Town to provide permanent and temporary Erosion Control Best Management Practices. These methods are outlined in detail in the plan set.

E. Phosphorous Standard

We understand that the Town of Naples Site Plan Ordinance requires that any project under Site Plan review that generates more than 40,000 square feet of non-vegetated area to meet the Phosphorous Standards outlined in the MDEP Chapter 500 Stormwater Management rules. Since the project does not exceed the 40,000 square feet of non-vegetated area, technically it is not required to meet this standard for the proposed development. Since it is anticipated that there may be future expansions of the self-storage facility, the site has been designed to meet this standard using an infiltration basin.

Based on our calculations, the project site's Project Phosphorous Budget (PPB) was determined to be 0.1767 lbs P/year. The calculations prepared for this standard indicated that the project's stormwater infrastructure effectively reduced the site's phosphorus export by approximately 70%; resulting in a total Post-Treatment Phosphorous Export (PPE) of 0.23 lbs P/year. Additionally, the project site's pre-1980 impervious surface equates to approximately 0.07± lbs P/year source treatment mitigation credit (STC). As illustrated on Worksheet 4 of the Phosphorous Budget calculations, the total Post-Treatment Phosphorous Export (PPE) of 0.23 lbs

P/year, when factored with the total Phosphorous Mitigation Credit 0.07± lbs P/year (comprised solely of source treatment mitigation credit (STC)), effectively reduces the Project's Phosphorous Export to less than the Project's Phosphorus Budget. These calculations can be found on the enclosed worksheets as Attachment 3 in this report.

F. Flooding Standard

The Town of Naples Site Plan Ordinance requires calculations be prepared to determine if there are any significant alterations to the existing flow patterns during the 25-year storm event. To maintain the existing flow rates an infiltration basin has been proposed as part of the stormwater infrastructure.

The proposed project design has been modeled to evaluate and analyze the stormwater runoff characteristics of the site prior to construction of the project and upon completion of all proposed construction activities. The first study point (SP-1) is located in the northwesterly portion of the site, along the project site's westerly property limits. This area is associated with a sub-basin watershed that consists of land of existing woods, and existing roofs landscaping, gravel and paved surfaces associated with existing restaurant. In the developed condition this area will essentially remain unchanged. Stormwater runoff tributary to SP-1 is conveyed overland to the north, where it ultimately is conveyed into the Crooked River and into Sebago Lake.

The second study point (SP-2) is located in the northeasterly portion of the site, along the project site's northerly and easterly property limits, and stormwater is not channelized and appears to be fairly evenly distributed along the property limits. This area is associated with a sub-basin watershed that consists of land of existing woods, and existing roofs, landscaping, gravel and paved surfaces associated with existing restaurant. In the developed condition a portion of this area will be developed with new structures, paved parking, the proposed stormwater management facilities and associated landscaping. Stormwater runoff tributary to SP-2 is conveyed overland to the northeast, where it ultimately is conveyed into the Crooked River and into Sebago Lake.

The third study point (SP-3) is located in the southeasterly portion of the site and analyzes runoff tributary to the southeast corner of the project site. This area is associated with a sub-basin watershed that consists of existing roofs, landscaping, gravel and paved surfaces associated with existing restaurant. In the developed condition this area will not be altered. Stormwater runoff tributary to SP-3 is conveyed overland to the northeast, where it ultimately is conveyed into the Crooked River and into Sebago Lake.

The fourth study point (SP-4) is located in the southwesterly portion of the site and analyzes a portion of the project site that is tributary to the southwest corner of the project site. This area is associated with a sub-basin watershed that consists of land of existing roofs landscaping, gravel and paved surfaces associated with existing restaurant. In the developed condition this area will not be altered. Stormwater runoff tributary to SP-4 is conveyed overland to the north, where it ultimately is conveyed into the Crooked River and into Sebago Lake.

The following table summarizes the analysis prepared for this stormwater management report:

Table 1 – Peak Rates of Stormwater Runoff						
Study Point	**2-Year (cfs)**		**10-Year (cfs)**		**25-Year (cfs)**	
	Pre	Post	Pre	Post	Pre	Post
SP-1	0.08	0.08	0.12	0.12	0.16	0.16
SP-2	0.50	0.06	0.73	0.09	0.95	0.12
SP-3	1.35	1.35	1.98	1.98	2.50	2.50
SP-4	0.17	0.17	0.25	0.25	0.32	0.32

As illustrated by the table above, the proposed BMP's as incorporated in the project's storm water design, effectively reduces the peak at all study points.

The watershed maps showing pre-development and post-development drainage patterns are included in the plan set and the computations performed with the HydroCAD software program are included as Attachment 4 of this report.

Maintenance of common facilities or property

The applicant will be responsible for the maintenance of the stormwater facilities. Enclosed as Attachment 5 of this report is an Inspection, Maintenance and Housekeeping Plan for the project.

Prepared by:

DM ROMA CONSULTING ENGINEERS

J.P. Connolly
Senior Project Engineer

Jayson R. Haskell P.E.
Southern Maine Regional Manager

STATE OF MAINE
JAYSON R. HASKELL
No. 13062
LICENSED
PROFESSIONAL ENGINEER

6-19-18

ATTACHMENT 1

SOILS MAP

Soil Map—Cumberland County and Part of Oxford County, Maine
(17080 - BLACK BEAR CAFE)

Map Scale: 1:1,410 if printed on A portrait (8.5" x 11") sheet.

N

Meters: 0 20 40 80 120

Feet: 0 50 100 200 300

Map projection: Web Mercator Corner coordinates: WGS84 Edge tics: UTM Zone 19N WGS84

MAP LEGEND

Area of Interest (AOI)

- Area of Interest (AOI)

Soils

- Soil Map Unit Polygons
- Soil Map Unit Lines
- Soil Map Unit Points

Special Point Features

- Blowout
- Borrow Pit
- Clay Spot
- Closed Depression
- Gravel Pit
- Gravelly Spot
- Landfill
- Lava Flow
- Marsh or swamp
- Mine or Quarry
- Miscellaneous Water
- Perennial Water
- Rock Outcrop
- Saline Spot
- Sandy Spot
- Severely Eroded Spot
- Sinkhole
- Slide or Slip
- Sodic Spot
- Spoil Area
- Stony Spot
- Very Stony Spot
- Wet Spot
- Other
- Special Line Features

Water Features

- Streams and Canals

Transportation

- Rails
- Interstate Highways
- US Routes
- Major Roads
- Local Roads

Background

- Aerial Photography

MAP INFORMATION

The soil surveys that comprise your AOI were mapped at 1:24,000.

Warning: Soil Map may not be valid at this scale.

Enlargement of maps beyond the scale of mapping can cause misunderstanding of the detail of mapping and accuracy of soil line placement. The maps do not show the small areas of contrasting soils that could have been shown at a more detailed scale.

Please rely on the bar scale on each map sheet for map measurements.

Source of Map: Natural Resources Conservation Service
Web Soil Survey URL:
Coordinate System: Web Mercator (EPSG:3857)

Maps from the Web Soil Survey are based on the Web Mercator projection, which preserves direction and shape but distorts distance and area. A projection that preserves area, such as the Albers equal-area conic projection, should be used if more accurate calculations of distance or area are required.

This product is generated from the USDA-NRCS certified data as of the version date(s) listed below.

Soil Survey Area: Cumberland County and Part of Oxford County, Maine
Survey Area Data: Version 13, Sep 11, 2017

Soil map units are labeled (as space allows) for map scales 1:50,000 or larger.

Date(s) aerial images were photographed: Apr 29, 2012—Jun 26, 2016

The orthophoto or other base map on which the soil lines were compiled and digitized probably differs from the background imagery displayed on these maps. As a result, some minor shifting of map unit boundaries may be evident.

Map Unit Legend

Map Unit Symbol	Map Unit Name	Acres in AOI	Percent of AOI
WmB	Windsor loamy sand, 0 to 8 percent slopes	4.3	100.0%
Totals for Area of Interest		**4.3**	**100.0%**

ATTACHMENT 2

TEST PIT LOGS

Town, City, Plantation	Street, Road Subdivision	Owner's Name
NAPLES	**ROOSEVELT TRAIL (ROUTE 302)**	**DM ROMA CONSULTING ENGINEERS**

SOIL TEST PITS BY BACKHOE

SOIL DESCRIPTION AND CLASSIFICATION (Location of Observation Holes Shown Above)

Observation Hole **TP 1** ■ Test Pit ☐ Boring

_____" Depth of Organic Horizon Above Mineral Soil

DEPTH BELOW MINERAL SOIL SURFACE (inches)

Texture	Consistency	Color	Mottling
SANDY LOAM	**FRIABLE**	**DARK YELLOWISH BROWN**	
LOAMY SAND & SAND		**LIGHT YELLOWISH BROWN**	
FINE SAND & SAND	**FIRM**	**OLIVE**	**COMMON DISTINCT**
(LIMIT OF EXCAVATION @ 72")			

FOR WASTEWATER DISPOSAL → Soil Classification: Profile **7**, Condition **C**; Slope ____ %; Limiting Factor **30** "; ■ Ground Water ☐ Restrictive Layer ☐ Bedrock ☐ Pit Depth

FOR SOILS MAPPING → Soil Series Name: ____ Drainage Class: ____ Hydrologic Group: ____

Observation Hole **TP 2** ■ Test Pit ☐ Boring

_____" Depth of Organic Horizon Above Mineral Soil

DEPTH BELOW MINERAL SOIL SURFACE (inches)

Texture	Consistency	Color	Mottling
LOAMY SAND	**FRIABLE**	**DARK BROWN**	
COARSE SAND & GRAVEL		**YELLOWISH BROWN**	**FEW FAINT**
	FIRM	**OLIVE**	**COMMON DISTINCT**
(LIMIT OF EXCAVATION @ 72")			

Soil Classification: Profile **7**, Condition **C**; Slope ____ %; Limiting Factor **24** "; ■ Ground Water ☐ Restrictive Layer ☐ Bedrock ☐ Pit Depth

Soil Series Name: ____ Drainage Class: ____ Hydrologic Group: ____

SOIL DESCRIPTION AND CLASSIFICATION (Location of Observation Holes Shown Above)

Observation Hole **TP 3** ■ Test Pit ☐ Boring

_____" Depth of Organic Horizon Above Mineral Soil

DEPTH BELOW MINERAL SOIL SURFACE (inches)

Texture	Consistency	Color	Mottling
SANDY LOAM	**FRIABLE**	**DARK BROWN**	
FINE & MEDIUM SANDS		**DARK YELLOWISH BROWN**	
		LIGHT YELLOWISH BROWN	
FINE SAND & SAND		**OLIVE**	**COMMON DISTINCT**
(LIMIT OF EXCAVATION @ 72")			

FOR WASTEWATER DISPOSAL → Soil Classification: Profile **5**, Condition **C**; Slope ____ %; Limiting Factor **36** "; ■ Ground Water ☐ Restrictive Layer ☐ Bedrock ☐ Pit Depth

FOR SOILS MAPPING → Soil Series Name: ____ Drainage Class: ____ Hydrologic Group: ____

Observation Hole _____ ■ Test Pit ☐ Boring

_____" Depth of Organic Horizon Above Mineral Soil

DEPTH BELOW MINERAL SOIL SURFACE (inches)

Texture	Consistency	Color	Mottling

STATE OF MAINE JAMES LOGAN #213 CERTIFIED SOIL SCIENTIST

Soil Classification: Profile ____ Condition ____; Slope ____ %; Limiting Factor ____ "; ☐ Ground Water ☐ Restrictive Layer ☐ Bedrock ☐ Pit Depth

Soil Series Name: ____ Drainage Class: ____ Hydrologic Group: ____

James Logan — Site Evaluator / Soil Scientist Signature

237/213 — SE/CSS #

5/23/18 — Date

JAMES LOGAN – LONGVIEW PARTNERS, LLC – 6 SECOND STREET – BUXTON, ME 04093 – longviewpartners213@gmail.com

ATTACHMENT 3

STORMWATER TREATMENT CALCULATIONS

Worksheet 1 - PPB calculations

Project Name: 17080 - 215 Roosevelt Trail Self-Storage

Lake Watershed: Sebago Lake

Town: Naples

Standard Calculations

Watershed per acre phosphorus budget (Appendix C)	**PAPB**	0.041	lbs P/acre/year
Total acreage of development parcel:	**TA**	4.31	acres
NWI wetland acreage:	**WA**	0	acres
Steep slope acreage:	**SA**	0	acres
Project acreage: A = TA - (WA+ SA)	**A**	4.31	acres
Project Phosphorus Budget: PPB = P x A	**PPB**	0.17671	**lbs P/year**

Small Watershed Adjustment

If Project Acreage (A) is greater than the threshold acreage for the small watershed threshold (SWT, from pertinent lake and town info in the table in Appendix C), calculate an alternative PPB using the analysis below and use this value if it is less than the the Standard Calculation PPB.

Small Watershed Threshold (Appendix C):	**SWT**	997	acres
Project acreage:	**A**	4.31	acres
Allowable increase in town's share of annual phosphorus load to lake (Appendix C):	**FC**	163.67	lbs P/year
Area available for development (Appendix C):	**AAD**	9968	acres
Ratio of A to AAD (R=A/AAD)	**R**	N/A	

Project Phosphorus Budget

If R < 0.5, PPB = [(FC x R)/2] + [FC/4]	**PPB**	N/A	**lbs P/year**
If R> 0.5, PPB = FC x R	**PPB**	N/A	**lbs P/year**

Worksheet 2
Pre-PPE and Post-PPE Calculations

Calculate phosphorus export from development for before and after treatment
Use as many sheets as needed for each development type (commercial, roads, residential lots, etc.)

Project name: 17080 - 215 Roosevelt Trail Self-Storage **Development type**: Commercial Sheet # 1 of 1

Land Surface Type with description or Lot #(s)	Acres or # of lots	Export Coefficient from Table 3.1 Table 3.2	Pre-treatment Algal Av. P Export (lbs P/year)	Treatment Factor for BMP(s) from Chapter 6	Post- treatment Algal Av. P Export (lbs P/year)	Description of BMPs
Proposed Roof	0.275	0.5	0.137741047	0.24	0.033057851	Infiltration Basin
Proposed Drive/Access	0.410	1.25	0.5125	0.24	0.123	Infiltration Basin
Proposed Landscape	0.160	0.4	0.064	0.24	0.01536	Infiltration Basin
Proposed Landscape - untreated	0.150	0.4	0.06	1	0.06	Untreated
		Total Pre-PPE (lbs P/year)	0.774241047	**Total PostPPE (lbs P/year)**	0.231417851	

Appendix D: Worksheet 3 - Mitigation credit

Project name:_____ Black Bear Café **Development type**: _____ Commercial Sheet # ____1_____

Mitigation credit when a pre-existing source is being eliminated

Mitigation Source Area Land Use	Acres	Export Coefficient (lbs P/acre/year)	Modifier	Pre-treatment Historical P Export (lbs P/year)	Treatment Factor for Historical BMP(s) (1.0 if no BMPs)	Historical P Export (lbs P/year)			Mitigation Credit (lbs P/year)	Comments
			0.5	0	1	0			0	
			0.5	0	1	0			0	
			0.5	0	1	0			0	
				Total source elimination mitiagion credit (SEC)					**0**	**lbs P/year**

Mitigation credit when a pre-existing source is treated by a new BMP

Mitigation Source Area Land Use	Acres	Export Coefficient (lbs P/acre/year)	Modifier	Pre-treatment Historical P Export (lbs P/year)	Treatment Factor for Historical BMP(s) (1.0 if no BMPs)	Historical P Export (lbs P/year)		Treatment Factor for New BMP(s) Chapter 6	Mitigation Credit (lbs P/year)	Comments
Gravel parking	0.14	1.25	0.5	0.0875	1	0.0875	1 -	0.24	0.0665	
Building Roof	0.01	0.5	0.5	0.0025	1	0.0025	1 -	0.24	0.0019	
			0.5	0	1	0	1 -		0	
				Total source treatment mitiagion credit (STC)					**0.0684**	**lbs P/year**

TOTAL MITIGATION CREDIT (SEC + STC)	**0.0684**	**lbs P/year**

WORKSHEET 4 - PROJECT PHOSPHORUS EXPORT SUMMARY

Summarizing the project's algal available phosphorus export (PPE)

Project Name: Black Bear Café, Naples

Project Phosphorus Budget - Worksheet 1	**PPB**	0.1767	lbs P/year
Total Pre-Treatment Phosphorus Export - Worksheet 2	**Pre-PPE**	0.77	lbs P/year
Total Post-Treatment Phosphorus Export - Worksheet 2	**Post-PPE**	0.23	lbs P/year
Total Phosphorus Mitigation Credit - Worksheet 3	**TMC**	0.07	lbs P/year
Project Phosphorus Export (Post-PPE - TMC)	**PPE**	0.16	lbs P/year

Is the Project Phosphorus Export ≤ the Project Phosphorus Budget? (PPE≤PPB)

*If **YES**, PPE is less than or equal to PPB and the project meets its phosphorus budget . If **NO,** PPE is greater than PPB, more reduction in phosphorus export is required or the payment of a compensation fee may be an option*	YES
The amount of phosphorus that needs further treatment or compensation	lbs P/year

Has Project Phosphorus Export been sufficiently reduced? *Is (Pre-PPE - Post-PPE)/Pre-PPE greater than 0.60?*

*If **YES**, in some watersheds the compensation fee is an available option. If **NO**, more treatment must be provided. PPE must be further reduced.*	YES
*The post-treatment phosphorus export must be less than 40% of the pre-treatment export (Post-PPE < 0.4*Pre-PPE)*	%

If the project is located in a watershed that is eligible for a compensation fee (or is a residential subdivision with buffers), a compensation fee may be appropriate as follows:

If Project Export has been reduced by greater than 60% and less than 75%, $25,000 per pound minus $833 per 1% Percent Export	
If Project Export has been reduced by greater than 75%, $12,500 per pound minus $500 per 1% Project Export	

ATTACHMENT 4

HYDROCAD ANALYSIS

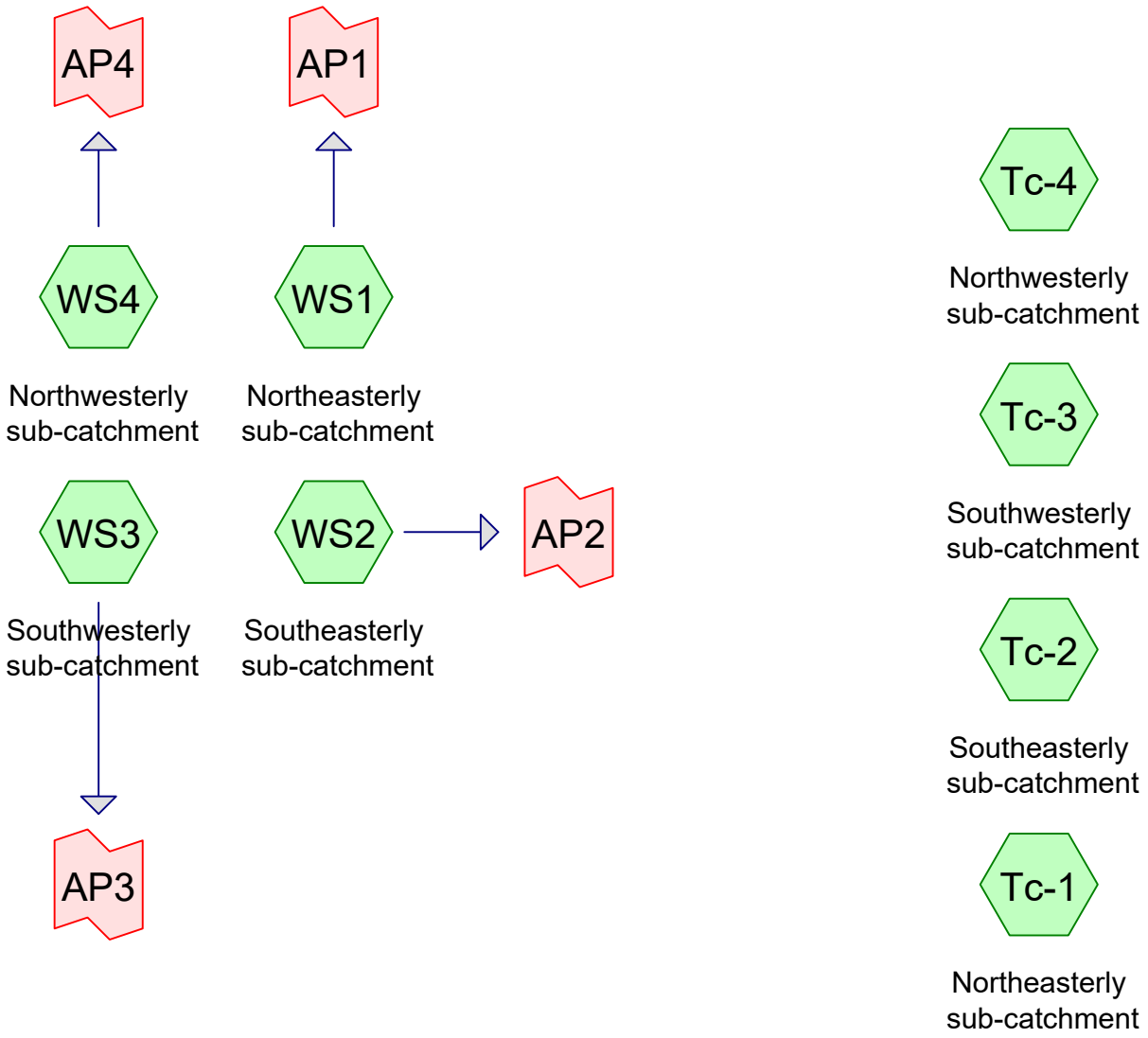

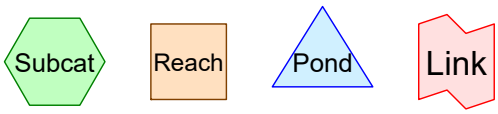

Routing Diagram for 17080 - Pre-Dev
Prepared by {enter your company name here}, Printed 6/19/2018
HydroCAD® 10.00-22 s/n 09237 © 2018 HydroCAD Software Solutions LLC

Time span=0.00-48.00 hrs, dt=0.10 hrs, 481 points x 2
Runoff by SCS TR-20 method, UH=SCS, Weighted-Q
Reach routing by Dyn-Stor-Ind method - Pond routing by Dyn-Stor-Ind method

Subcatchment Tc-1: Northeasterly Runoff Area=4 sf 25.00% Impervious Runoff Depth=1.33"
Flow Length=323' Tc=6.0 min CN=WQ Runoff=0.00 cfs 0 cf

Subcatchment Tc-2: Southeasterly Runoff Area=5 sf 40.00% Impervious Runoff Depth=1.62"
Flow Length=294' Tc=6.0 min CN=WQ Runoff=0.00 cfs 1 cf

Subcatchment Tc-3: Southwesterly Runoff Area=4 sf 50.00% Impervious Runoff Depth=2.03"
Flow Length=276' Tc=6.0 min CN=WQ Runoff=0.00 cfs 1 cf

Subcatchment Tc-4: Northwesterly Runoff Area=3 sf 33.33% Impervious Runoff Depth=1.78"
Flow Length=45' Tc=6.0 min CN=WQ Runoff=0.00 cfs 0 cf

Subcatchment WS1: Northeasterly Runoff Area=41,342 sf 1.74% Impervious Runoff Depth=0.09"
Tc=6.0 min CN=WQ Runoff=0.08 cfs 309 cf

Subcatchment WS2: Southeasterly Runoff Area=119,142 sf 1.02% Impervious Runoff Depth=0.18"
Tc=6.0 min CN=WQ Runoff=0.50 cfs 1,787 cf

Subcatchment WS3: Southwesterly Runoff Area=23,336 sf 6.61% Impervious Runoff Depth=2.48"
Tc=6.0 min CN=WQ Runoff=1.35 cfs 4,814 cf

Subcatchment WS4: Northwesterly Runoff Area=3,731 sf 13.64% Impervious Runoff Depth=1.97"
Tc=6.0 min CN=WQ Runoff=0.17 cfs 613 cf

Link AP1: Inflow=0.08 cfs 309 cf
Primary=0.08 cfs 309 cf

Link AP2: Inflow=0.50 cfs 1,787 cf
Primary=0.50 cfs 1,787 cf

Link AP3: Inflow=1.35 cfs 4,814 cf
Primary=1.35 cfs 4,814 cf

Link AP4: Inflow=0.17 cfs 613 cf
Primary=0.17 cfs 613 cf

Total Runoff Area = 187,567 sf Runoff Volume = 7,524 cf Average Runoff Depth = 0.48"
97.87% Pervious = 183,577 sf 2.13% Impervious = 3,990 sf

Summary for Subcatchment Tc-1: Northeasterly sub-catchment

Runoff = 0.00 cfs @ 12.09 hrs, Volume= 0 cf, Depth= 1.33"

Runoff by SCS TR-20 method, UH=SCS, Weighted-Q, Time Span= 0.00-48.00 hrs, dt= 0.10 hrs
Type III 24-hr 2-YEAR Rainfall=3.00", Ia/S=0.18

	Area (sf)	CN	Description
	1	96	Gravel surface, HSG A
	1	39	>75% Grass cover, Good, HSG A
	1	30	Woods, Good, HSG A
*	1	98	Building
	4		Weighted Average
	3		75.00% Pervious Area
	1		25.00% Impervious Area

Tc (min)	Length (feet)	Slope (ft/ft)	Velocity (ft/sec)	Capacity (cfs)	Description
0.5	33	0.0200	1.07		**Sheet Flow, Seg A to B** Smooth surfaces n= 0.011 P2= 3.00"
1.9	117	0.0426	1.03		**Shallow Concentrated Flow, Seg B to C** Woodland Kv= 5.0 fps
3.4	173	0.0293	0.86		**Shallow Concentrated Flow, Seg C to D** Woodland Kv= 5.0 fps
5.8	323	Total, Increased to minimum Tc = 6.0 min			

Summary for Subcatchment Tc-2: Southeasterly sub-catchment

Runoff = 0.00 cfs @ 12.09 hrs, Volume= 1 cf, Depth= 1.62"

Runoff by SCS TR-20 method, UH=SCS, Weighted-Q, Time Span= 0.00-48.00 hrs, dt= 0.10 hrs
Type III 24-hr 2-YEAR Rainfall=3.00", Ia/S=0.18

	Area (sf)	CN	Description
	1	30	Woods, Good, HSG A
*	1	98	Pavement
	1	39	>75% Grass cover, Good, HSG A
	1	98	Unconnected roofs, HSG A
	1	96	Gravel surface, HSG A
	5		Weighted Average
	3		60.00% Pervious Area
	2		40.00% Impervious Area
	1		50.00% Unconnected

Tc (min)	Length (feet)	Slope (ft/ft)	Velocity (ft/sec)	Capacity (cfs)	Description
1.2	150	0.0520	2.12		**Sheet Flow, Seg A to B** Smooth surfaces n= 0.011 P2= 3.00"
0.5	74	0.0235	2.47		**Shallow Concentrated Flow, Seg B to C** Unpaved Kv= 16.1 fps
0.9	70	0.0677	1.30		**Shallow Concentrated Flow, Seg C to D** Woodland Kv= 5.0 fps
2.6	294	Total, Increased to minimum Tc = 6.0 min			

Summary for Subcatchment Tc-3: Southwesterly sub-catchment

Runoff = 0.00 cfs @ 12.09 hrs, Volume= 1 cf, Depth= 2.03"

Runoff by SCS TR-20 method, UH=SCS, Weighted-Q, Time Span= 0.00-48.00 hrs, dt= 0.10 hrs
Type III 24-hr 2-YEAR Rainfall=3.00", Ia/S=0.18

	Area (sf)	CN	Description
*	1	98	Pavement
	1	39	>75% Grass cover, Good, HSG A
	1	98	Unconnected roofs, HSG A
	1	96	Gravel surface, HSG A
	4		Weighted Average
	2		50.00% Pervious Area
	2		50.00% Impervious Area
	1		50.00% Unconnected

Tc (min)	Length (feet)	Slope (ft/ft)	Velocity (ft/sec)	Capacity (cfs)	Description
1.3	150	0.0430	1.96		**Sheet Flow, Seg A to B** Smooth surfaces n= 0.011 P2= 3.00"
1.1	126	0.0140	1.90		**Shallow Concentrated Flow, Seg B to C** Unpaved Kv= 16.1 fps
2.4	276	Total, Increased to minimum Tc = 6.0 min			

Summary for Subcatchment Tc-4: Northwesterly sub-catchment

Runoff = 0.00 cfs @ 12.09 hrs, Volume= 0 cf, Depth= 1.78"

Runoff by SCS TR-20 method, UH=SCS, Weighted-Q, Time Span= 0.00-48.00 hrs, dt= 0.10 hrs
Type III 24-hr 2-YEAR Rainfall=3.00", Ia/S=0.18

Area (sf)	CN	Description
1	98	Roofs, HSG A
1	96	Gravel surface, HSG A
1	39	>75% Grass cover, Good, HSG A
3		Weighted Average
2		66.67% Pervious Area
1		33.33% Impervious Area

Tc (min)	Length (feet)	Slope (ft/ft)	Velocity (ft/sec)	Capacity (cfs)	Description
1.2	37	0.0668	0.53		**Sheet Flow, Seg A to B** Fallow n= 0.050 P2= 3.00"
0.0	8	0.0831	4.64		**Shallow Concentrated Flow, Seg B to C** Unpaved Kv= 16.1 fps
1.2	45	Total, Increased to minimum Tc = 6.0 min			

Summary for Subcatchment WS1: Northeasterly sub-catchment

Runoff = 0.08 cfs @ 12.09 hrs, Volume= 309 cf, Depth= 0.09"

Runoff by SCS TR-20 method, UH=SCS, Weighted-Q, Time Span= 0.00-48.00 hrs, dt= 0.10 hrs
Type III 24-hr 2-YEAR Rainfall=3.00", Ia/S=0.18

	Area (sf)	CN	Description
	662	96	Gravel surface, HSG A
	4,118	39	>75% Grass cover, Good, HSG A
	35,841	30	Woods, Good, HSG A
*	721	98	Building
	41,342		Weighted Average
	40,621		98.26% Pervious Area
	721		1.74% Impervious Area

Tc (min)	Length (feet)	Slope (ft/ft)	Velocity (ft/sec)	Capacity (cfs)	Description
6.0					**Direct Entry, Tc calc - see Tc-1**

Summary for Subcatchment WS2: Southeasterly sub-catchment

Runoff = 0.50 cfs @ 12.09 hrs, Volume= 1,787 cf, Depth= 0.18"

Runoff by SCS TR-20 method, UH=SCS, Weighted-Q, Time Span= 0.00-48.00 hrs, dt= 0.10 hrs
Type III 24-hr 2-YEAR Rainfall=3.00", Ia/S=0.18

	Area (sf)	CN	Description
	78,390	30	Woods, Good, HSG A
*	605	98	Pavement
	32,506	39	>75% Grass cover, Good, HSG A
	606	98	Unconnected roofs, HSG A
	7,035	96	Gravel surface, HSG A
	119,142		Weighted Average
	117,931		98.98% Pervious Area
	1,211		1.02% Impervious Area
	606		50.04% Unconnected

Tc (min)	Length (feet)	Slope (ft/ft)	Velocity (ft/sec)	Capacity (cfs)	Description
6.0					**Direct Entry, Tc calc - see Tc-2**

Summary for Subcatchment WS3: Southwesterly sub-catchment

Runoff = 1.35 cfs @ 12.09 hrs, Volume= 4,814 cf, Depth= 2.48"

Runoff by SCS TR-20 method, UH=SCS, Weighted-Q, Time Span= 0.00-48.00 hrs, dt= 0.10 hrs
Type III 24-hr 2-YEAR Rainfall=3.00", Ia/S=0.18

	Area (sf)	CN	Description
*	788	98	Pavement
	901	39	>75% Grass cover, Good, HSG A
	755	98	Roofs, HSG A
	20,892	96	Gravel surface, HSG A
	23,336		Weighted Average
	21,793		93.39% Pervious Area
	1,543		6.61% Impervious Area

Tc (min)	Length (feet)	Slope (ft/ft)	Velocity (ft/sec)	Capacity (cfs)	Description
6.0					**Direct Entry, Tc calc - see Tc-3**

Summary for Subcatchment WS4: Northwesterly sub-catchment

Runoff = 0.17 cfs @ 12.09 hrs, Volume= 613 cf, Depth= 1.97"

Runoff by SCS TR-20 method, UH=SCS, Weighted-Q, Time Span= 0.00-48.00 hrs, dt= 0.10 hrs
Type III 24-hr 2-YEAR Rainfall=3.00", Ia/S=0.18

Area (sf)	CN	Description
509	98	Roofs, HSG A
2,320	96	Gravel surface, HSG A
902	39	>75% Grass cover, Good, HSG A
3,731		Weighted Average
3,222		86.36% Pervious Area
509		13.64% Impervious Area

Tc (min)	Length (feet)	Slope (ft/ft)	Velocity (ft/sec)	Capacity (cfs)	Description
6.0					**Direct Entry, Tc calc - see Tc-4**

Summary for Link AP1:

Inflow Area = 41,342 sf, 1.74% Impervious, Inflow Depth = 0.09" for 2-YEAR event
Inflow = 0.08 cfs @ 12.09 hrs, Volume= 309 cf
Primary = 0.08 cfs @ 12.09 hrs, Volume= 309 cf, Atten= 0%, Lag= 0.0 min

Primary outflow = Inflow, Time Span= 0.00-48.00 hrs, dt= 0.10 hrs

Summary for Link AP2:

Inflow Area = 119,142 sf, 1.02% Impervious, Inflow Depth = 0.18" for 2-YEAR event
Inflow = 0.50 cfs @ 12.09 hrs, Volume= 1,787 cf
Primary = 0.50 cfs @ 12.09 hrs, Volume= 1,787 cf, Atten= 0%, Lag= 0.0 min

Primary outflow = Inflow, Time Span= 0.00-48.00 hrs, dt= 0.10 hrs

Summary for Link AP3:

Inflow Area = 23,336 sf, 6.61% Impervious, Inflow Depth = 2.48" for 2-YEAR event
Inflow = 1.35 cfs @ 12.09 hrs, Volume= 4,814 cf
Primary = 1.35 cfs @ 12.09 hrs, Volume= 4,814 cf, Atten= 0%, Lag= 0.0 min

Primary outflow = Inflow, Time Span= 0.00-48.00 hrs, dt= 0.10 hrs

Summary for Link AP4:

Inflow Area = 3,731 sf, 13.64% Impervious, Inflow Depth = 1.97" for 2-YEAR event
Inflow = 0.17 cfs @ 12.09 hrs, Volume= 613 cf
Primary = 0.17 cfs @ 12.09 hrs, Volume= 613 cf, Atten= 0%, Lag= 0.0 min

Primary outflow = Inflow, Time Span= 0.00-48.00 hrs, dt= 0.10 hrs

Time span=0.00-48.00 hrs, dt=0.10 hrs, 481 points x 2
Runoff by SCS TR-20 method, UH=SCS, Weighted-Q
Reach routing by Dyn-Stor-Ind method - Pond routing by Dyn-Stor-Ind method

Subcatchment Tc-1: Northeasterly Runoff Area=4 sf 25.00% Impervious Runoff Depth=2.01"
Flow Length=323' Tc=6.0 min CN=WQ Runoff=0.00 cfs 1 cf

Subcatchment Tc-2: Southeasterly Runoff Area=5 sf 40.00% Impervious Runoff Depth=2.42"
Flow Length=294' Tc=6.0 min CN=WQ Runoff=0.00 cfs 1 cf

Subcatchment Tc-3: Southwesterly Runoff Area=4 sf 50.00% Impervious Runoff Depth=3.03"
Flow Length=276' Tc=6.0 min CN=WQ Runoff=0.00 cfs 1 cf

Subcatchment Tc-4: Northwesterly Runoff Area=3 sf 33.33% Impervious Runoff Depth=2.68"
Flow Length=45' Tc=6.0 min CN=WQ Runoff=0.00 cfs 1 cf

Subcatchment WS1: Northeasterly Runoff Area=41,342 sf 1.74% Impervious Runoff Depth=0.15"
Tc=6.0 min CN=WQ Runoff=0.12 cfs 502 cf

Subcatchment WS2: Southeasterly Runoff Area=119,142 sf 1.02% Impervious Runoff Depth=0.30"
Tc=6.0 min CN=WQ Runoff=0.73 cfs 3,017 cf

Subcatchment WS3: Southwesterly Runoff Area=23,336 sf 6.61% Impervious Runoff Depth=3.72"
Tc=6.0 min CN=WQ Runoff=1.98 cfs 7,228 cf

Subcatchment WS4: Northwesterly Runoff Area=3,731 sf 13.64% Impervious Runoff Depth=2.98"
Tc=6.0 min CN=WQ Runoff=0.25 cfs 926 cf

Link AP1: Inflow=0.12 cfs 502 cf
Primary=0.12 cfs 502 cf

Link AP2: Inflow=0.73 cfs 3,017 cf
Primary=0.73 cfs 3,017 cf

Link AP3: Inflow=1.98 cfs 7,228 cf
Primary=1.98 cfs 7,228 cf

Link AP4: Inflow=0.25 cfs 926 cf
Primary=0.25 cfs 926 cf

Total Runoff Area = 187,567 sf Runoff Volume = 11,676 cf Average Runoff Depth = 0.75"
97.87% Pervious = 183,577 sf 2.13% Impervious = 3,990 sf

Summary for Subcatchment Tc-1: Northeasterly sub-catchment

Runoff = 0.00 cfs @ 12.09 hrs, Volume= 1 cf, Depth= 2.01"

Runoff by SCS TR-20 method, UH=SCS, Weighted-Q, Time Span= 0.00-48.00 hrs, dt= 0.10 hrs
Type III 24-hr 10-YEAR Rainfall=4.30", Ia/S=0.18

	Area (sf)	CN	Description
	1	96	Gravel surface, HSG A
	1	39	>75% Grass cover, Good, HSG A
	1	30	Woods, Good, HSG A
*	1	98	Building
	4		Weighted Average
	3		75.00% Pervious Area
	1		25.00% Impervious Area

Tc (min)	Length (feet)	Slope (ft/ft)	Velocity (ft/sec)	Capacity (cfs)	Description
0.5	33	0.0200	1.07		**Sheet Flow, Seg A to B** Smooth surfaces n= 0.011 P2= 3.00"
1.9	117	0.0426	1.03		**Shallow Concentrated Flow, Seg B to C** Woodland Kv= 5.0 fps
3.4	173	0.0293	0.86		**Shallow Concentrated Flow, Seg C to D** Woodland Kv= 5.0 fps
5.8	323	Total, Increased to minimum Tc = 6.0 min			

Summary for Subcatchment Tc-2: Southeasterly sub-catchment

Runoff = 0.00 cfs @ 12.09 hrs, Volume= 1 cf, Depth= 2.42"

Runoff by SCS TR-20 method, UH=SCS, Weighted-Q, Time Span= 0.00-48.00 hrs, dt= 0.10 hrs
Type III 24-hr 10-YEAR Rainfall=4.30", Ia/S=0.18

	Area (sf)	CN	Description
	1	30	Woods, Good, HSG A
*	1	98	Pavement
	1	39	>75% Grass cover, Good, HSG A
	1	98	Unconnected roofs, HSG A
	1	96	Gravel surface, HSG A
	5		Weighted Average
	3		60.00% Pervious Area
	2		40.00% Impervious Area
	1		50.00% Unconnected

Tc (min)	Length (feet)	Slope (ft/ft)	Velocity (ft/sec)	Capacity (cfs)	Description
1.2	150	0.0520	2.12		**Sheet Flow, Seg A to B** Smooth surfaces n= 0.011 P2= 3.00"
0.5	74	0.0235	2.47		**Shallow Concentrated Flow, Seg B to C** Unpaved Kv= 16.1 fps
0.9	70	0.0677	1.30		**Shallow Concentrated Flow, Seg C to D** Woodland Kv= 5.0 fps
2.6	294	Total, Increased to minimum Tc = 6.0 min			

Summary for Subcatchment Tc-3: Southwesterly sub-catchment

Runoff = 0.00 cfs @ 12.09 hrs, Volume= 1 cf, Depth= 3.03"

Runoff by SCS TR-20 method, UH=SCS, Weighted-Q, Time Span= 0.00-48.00 hrs, dt= 0.10 hrs
Type III 24-hr 10-YEAR Rainfall=4.30", Ia/S=0.18

	Area (sf)	CN	Description
*	1	98	Pavement
	1	39	>75% Grass cover, Good, HSG A
	1	98	Unconnected roofs, HSG A
	1	96	Gravel surface, HSG A
	4		Weighted Average
	2		50.00% Pervious Area
	2		50.00% Impervious Area
	1		50.00% Unconnected

Tc (min)	Length (feet)	Slope (ft/ft)	Velocity (ft/sec)	Capacity (cfs)	Description
1.3	150	0.0430	1.96		**Sheet Flow, Seg A to B** Smooth surfaces n= 0.011 P2= 3.00"
1.1	126	0.0140	1.90		**Shallow Concentrated Flow, Seg B to C** Unpaved Kv= 16.1 fps
2.4	276	Total, Increased to minimum Tc = 6.0 min			

Summary for Subcatchment Tc-4: Northwesterly sub-catchment

Runoff = 0.00 cfs @ 12.09 hrs, Volume= 1 cf, Depth= 2.68"

Runoff by SCS TR-20 method, UH=SCS, Weighted-Q, Time Span= 0.00-48.00 hrs, dt= 0.10 hrs
Type III 24-hr 10-YEAR Rainfall=4.30", Ia/S=0.18

Area (sf)	CN	Description
1	98	Roofs, HSG A
1	96	Gravel surface, HSG A
1	39	>75% Grass cover, Good, HSG A
3		Weighted Average
2		66.67% Pervious Area
1		33.33% Impervious Area

Tc (min)	Length (feet)	Slope (ft/ft)	Velocity (ft/sec)	Capacity (cfs)	Description
1.2	37	0.0668	0.53		**Sheet Flow, Seg A to B** Fallow n= 0.050 P2= 3.00"
0.0	8	0.0831	4.64		**Shallow Concentrated Flow, Seg B to C** Unpaved Kv= 16.1 fps
1.2	45	Total, Increased to minimum Tc = 6.0 min			

Summary for Subcatchment WS1: Northeasterly sub-catchment

Runoff = 0.12 cfs @ 12.09 hrs, Volume= 502 cf, Depth= 0.15"

Runoff by SCS TR-20 method, UH=SCS, Weighted-Q, Time Span= 0.00-48.00 hrs, dt= 0.10 hrs
Type III 24-hr 10-YEAR Rainfall=4.30", Ia/S=0.18

	Area (sf)	CN	Description
	662	96	Gravel surface, HSG A
	4,118	39	>75% Grass cover, Good, HSG A
	35,841	30	Woods, Good, HSG A
*	721	98	Building
	41,342		Weighted Average
	40,621		98.26% Pervious Area
	721		1.74% Impervious Area

Tc (min)	Length (feet)	Slope (ft/ft)	Velocity (ft/sec)	Capacity (cfs)	Description
6.0					**Direct Entry, Tc calc - see Tc-1**

Summary for Subcatchment WS2: Southeasterly sub-catchment

Runoff = 0.73 cfs @ 12.09 hrs, Volume= 3,017 cf, Depth= 0.30"

Runoff by SCS TR-20 method, UH=SCS, Weighted-Q, Time Span= 0.00-48.00 hrs, dt= 0.10 hrs
Type III 24-hr 10-YEAR Rainfall=4.30", Ia/S=0.18

	Area (sf)	CN	Description
	78,390	30	Woods, Good, HSG A
*	605	98	Pavement
	32,506	39	>75% Grass cover, Good, HSG A
	606	98	Unconnected roofs, HSG A
	7,035	96	Gravel surface, HSG A
	119,142		Weighted Average
	117,931		98.98% Pervious Area
	1,211		1.02% Impervious Area
	606		50.04% Unconnected

Tc (min)	Length (feet)	Slope (ft/ft)	Velocity (ft/sec)	Capacity (cfs)	Description
6.0					**Direct Entry, Tc calc - see Tc-2**

Summary for Subcatchment WS3: Southwesterly sub-catchment

Runoff = 1.98 cfs @ 12.09 hrs, Volume= 7,228 cf, Depth= 3.72"

Runoff by SCS TR-20 method, UH=SCS, Weighted-Q, Time Span= 0.00-48.00 hrs, dt= 0.10 hrs
Type III 24-hr 10-YEAR Rainfall=4.30", Ia/S=0.18

	Area (sf)	CN	Description
*	788	98	Pavement
	901	39	>75% Grass cover, Good, HSG A
	755	98	Roofs, HSG A
	20,892	96	Gravel surface, HSG A
	23,336		Weighted Average
	21,793		93.39% Pervious Area
	1,543		6.61% Impervious Area

Tc (min)	Length (feet)	Slope (ft/ft)	Velocity (ft/sec)	Capacity (cfs)	Description
6.0					**Direct Entry, Tc calc - see Tc-3**

Summary for Subcatchment WS4: Northwesterly sub-catchment

Runoff = 0.25 cfs @ 12.09 hrs, Volume= 926 cf, Depth= 2.98"

Runoff by SCS TR-20 method, UH=SCS, Weighted-Q, Time Span= 0.00-48.00 hrs, dt= 0.10 hrs
Type III 24-hr 10-YEAR Rainfall=4.30", Ia/S=0.18

Area (sf)	CN	Description
509	98	Roofs, HSG A
2,320	96	Gravel surface, HSG A
902	39	>75% Grass cover, Good, HSG A
3,731		Weighted Average
3,222		86.36% Pervious Area
509		13.64% Impervious Area

Tc (min)	Length (feet)	Slope (ft/ft)	Velocity (ft/sec)	Capacity (cfs)	Description
6.0					**Direct Entry, Tc calc - see Tc-4**

Summary for Link AP1:

Inflow Area = 41,342 sf, 1.74% Impervious, Inflow Depth = 0.15" for 10-YEAR event
Inflow = 0.12 cfs @ 12.09 hrs, Volume= 502 cf
Primary = 0.12 cfs @ 12.09 hrs, Volume= 502 cf, Atten= 0%, Lag= 0.0 min

Primary outflow = Inflow, Time Span= 0.00-48.00 hrs, dt= 0.10 hrs

Summary for Link AP2:

Inflow Area = 119,142 sf, 1.02% Impervious, Inflow Depth = 0.30" for 10-YEAR event
Inflow = 0.73 cfs @ 12.09 hrs, Volume= 3,017 cf
Primary = 0.73 cfs @ 12.09 hrs, Volume= 3,017 cf, Atten= 0%, Lag= 0.0 min

Primary outflow = Inflow, Time Span= 0.00-48.00 hrs, dt= 0.10 hrs

Summary for Link AP3:

Inflow Area = 23,336 sf, 6.61% Impervious, Inflow Depth = 3.72" for 10-YEAR event
Inflow = 1.98 cfs @ 12.09 hrs, Volume= 7,228 cf
Primary = 1.98 cfs @ 12.09 hrs, Volume= 7,228 cf, Atten= 0%, Lag= 0.0 min

Primary outflow = Inflow, Time Span= 0.00-48.00 hrs, dt= 0.10 hrs

Summary for Link AP4:

Inflow Area = 3,731 sf, 13.64% Impervious, Inflow Depth = 2.98" for 10-YEAR event
Inflow = 0.25 cfs @ 12.09 hrs, Volume= 926 cf
Primary = 0.25 cfs @ 12.09 hrs, Volume= 926 cf, Atten= 0%, Lag= 0.0 min

Primary outflow = Inflow, Time Span= 0.00-48.00 hrs, dt= 0.10 hrs

Time span=0.00-48.00 hrs, dt=0.10 hrs, 481 points x 2
Runoff by SCS TR-20 method, UH=SCS, Weighted-Q
Reach routing by Dyn-Stor-Ind method - Pond routing by Dyn-Stor-Ind method

Subcatchment Tc-1: Northeasterly Runoff Area=4 sf 25.00% Impervious Runoff Depth=2.63"
Flow Length=323' Tc=6.0 min CN=WQ Runoff=0.00 cfs 1 cf

Subcatchment Tc-2: Southeasterly Runoff Area=5 sf 40.00% Impervious Runoff Depth=3.14"
Flow Length=294' Tc=6.0 min CN=WQ Runoff=0.00 cfs 1 cf

Subcatchment Tc-3: Southwesterly Runoff Area=4 sf 50.00% Impervious Runoff Depth=3.91"
Flow Length=276' Tc=6.0 min CN=WQ Runoff=0.00 cfs 1 cf

Subcatchment Tc-4: Northwesterly Runoff Area=3 sf 33.33% Impervious Runoff Depth=3.49"
Flow Length=45' Tc=6.0 min CN=WQ Runoff=0.00 cfs 1 cf

Subcatchment WS1: Northeasterly Runoff Area=41,342 sf 1.74% Impervious Runoff Depth=0.26"
Tc=6.0 min CN=WQ Runoff=0.16 cfs 884 cf

Subcatchment WS2: Southeasterly Runoff Area=119,142 sf 1.02% Impervious Runoff Depth=0.48"
Tc=6.0 min CN=WQ Runoff=0.95 cfs 4,793 cf

Subcatchment WS3: Southwesterly Runoff Area=23,336 sf 6.61% Impervious Runoff Depth=4.78"
Tc=6.0 min CN=WQ Runoff=2.50 cfs 9,290 cf

Subcatchment WS4: Northwesterly Runoff Area=3,731 sf 13.64% Impervious Runoff Depth=3.86"
Tc=6.0 min CN=WQ Runoff=0.32 cfs 1,201 cf

Link AP1: Inflow=0.16 cfs 884 cf
Primary=0.16 cfs 884 cf

Link AP2: Inflow=0.95 cfs 4,793 cf
Primary=0.95 cfs 4,793 cf

Link AP3: Inflow=2.50 cfs 9,290 cf
Primary=2.50 cfs 9,290 cf

Link AP4: Inflow=0.32 cfs 1,201 cf
Primary=0.32 cfs 1,201 cf

Total Runoff Area = 187,567 sf Runoff Volume = 16,173 cf Average Runoff Depth = 1.03"
97.87% Pervious = 183,577 sf 2.13% Impervious = 3,990 sf

Summary for Subcatchment Tc-1: Northeasterly sub-catchment

Runoff = 0.00 cfs @ 12.09 hrs, Volume= 1 cf, Depth= 2.63"

Runoff by SCS TR-20 method, UH=SCS, Weighted-Q, Time Span= 0.00-48.00 hrs, dt= 0.10 hrs
Type III 24-hr 25-YEAR Rainfall=5.40", Ia/S=0.18

	Area (sf)	CN	Description
	1	96	Gravel surface, HSG A
	1	39	>75% Grass cover, Good, HSG A
	1	30	Woods, Good, HSG A
*	1	98	Building
	4		Weighted Average
	3		75.00% Pervious Area
	1		25.00% Impervious Area

Tc (min)	Length (feet)	Slope (ft/ft)	Velocity (ft/sec)	Capacity (cfs)	Description
0.5	33	0.0200	1.07		**Sheet Flow, Seg A to B** Smooth surfaces n= 0.011 P2= 3.00"
1.9	117	0.0426	1.03		**Shallow Concentrated Flow, Seg B to C** Woodland Kv= 5.0 fps
3.4	173	0.0293	0.86		**Shallow Concentrated Flow, Seg C to D** Woodland Kv= 5.0 fps
5.8	323	Total, Increased to minimum Tc = 6.0 min			

Summary for Subcatchment Tc-2: Southeasterly sub-catchment

Runoff = 0.00 cfs @ 12.09 hrs, Volume= 1 cf, Depth= 3.14"

Runoff by SCS TR-20 method, UH=SCS, Weighted-Q, Time Span= 0.00-48.00 hrs, dt= 0.10 hrs
Type III 24-hr 25-YEAR Rainfall=5.40", Ia/S=0.18

	Area (sf)	CN	Description
	1	30	Woods, Good, HSG A
*	1	98	Pavement
	1	39	>75% Grass cover, Good, HSG A
	1	98	Unconnected roofs, HSG A
	1	96	Gravel surface, HSG A
	5		Weighted Average
	3		60.00% Pervious Area
	2		40.00% Impervious Area
	1		50.00% Unconnected

Tc (min)	Length (feet)	Slope (ft/ft)	Velocity (ft/sec)	Capacity (cfs)	Description
1.2	150	0.0520	2.12		**Sheet Flow, Seg A to B** Smooth surfaces n= 0.011 P2= 3.00"
0.5	74	0.0235	2.47		**Shallow Concentrated Flow, Seg B to C** Unpaved Kv= 16.1 fps
0.9	70	0.0677	1.30		**Shallow Concentrated Flow, Seg C to D** Woodland Kv= 5.0 fps
2.6	294	Total, Increased to minimum Tc = 6.0 min			

Summary for Subcatchment Tc-3: Southwesterly sub-catchment

Runoff = 0.00 cfs @ 12.09 hrs, Volume= 1 cf, Depth= 3.91"

Runoff by SCS TR-20 method, UH=SCS, Weighted-Q, Time Span= 0.00-48.00 hrs, dt= 0.10 hrs
Type III 24-hr 25-YEAR Rainfall=5.40", Ia/S=0.18

	Area (sf)	CN	Description
*	1	98	Pavement
	1	39	>75% Grass cover, Good, HSG A
	1	98	Unconnected roofs, HSG A
	1	96	Gravel surface, HSG A
	4		Weighted Average
	2		50.00% Pervious Area
	2		50.00% Impervious Area
	1		50.00% Unconnected

Tc (min)	Length (feet)	Slope (ft/ft)	Velocity (ft/sec)	Capacity (cfs)	Description
1.3	150	0.0430	1.96		**Sheet Flow, Seg A to B** Smooth surfaces n= 0.011 P2= 3.00"
1.1	126	0.0140	1.90		**Shallow Concentrated Flow, Seg B to C** Unpaved Kv= 16.1 fps
2.4	276	Total, Increased to minimum Tc = 6.0 min			

Summary for Subcatchment Tc-4: Northwesterly sub-catchment

Runoff = 0.00 cfs @ 12.09 hrs, Volume= 1 cf, Depth= 3.49"

Runoff by SCS TR-20 method, UH=SCS, Weighted-Q, Time Span= 0.00-48.00 hrs, dt= 0.10 hrs
Type III 24-hr 25-YEAR Rainfall=5.40", Ia/S=0.18

Area (sf)	CN	Description
1	98	Roofs, HSG A
1	96	Gravel surface, HSG A
1	39	>75% Grass cover, Good, HSG A
3		Weighted Average
2		66.67% Pervious Area
1		33.33% Impervious Area

Tc (min)	Length (feet)	Slope (ft/ft)	Velocity (ft/sec)	Capacity (cfs)	Description
1.2	37	0.0668	0.53		**Sheet Flow, Seg A to B** Fallow n= 0.050 P2= 3.00"
0.0	8	0.0831	4.64		**Shallow Concentrated Flow, Seg B to C** Unpaved Kv= 16.1 fps
1.2	45	Total, Increased to minimum Tc = 6.0 min			

Summary for Subcatchment WS1: Northeasterly sub-catchment

Runoff = 0.16 cfs @ 12.10 hrs, Volume= 884 cf, Depth= 0.26"

Runoff by SCS TR-20 method, UH=SCS, Weighted-Q, Time Span= 0.00-48.00 hrs, dt= 0.10 hrs
Type III 24-hr 25-YEAR Rainfall=5.40", Ia/S=0.18

	Area (sf)	CN	Description
	662	96	Gravel surface, HSG A
	4,118	39	>75% Grass cover, Good, HSG A
	35,841	30	Woods, Good, HSG A
*	721	98	Building
	41,342		Weighted Average
	40,621		98.26% Pervious Area
	721		1.74% Impervious Area

Tc (min)	Length (feet)	Slope (ft/ft)	Velocity (ft/sec)	Capacity (cfs)	Description
6.0					**Direct Entry, Tc calc - see Tc-1**

Summary for Subcatchment WS2: Southeasterly sub-catchment

Runoff = 0.95 cfs @ 12.10 hrs, Volume= 4,793 cf, Depth= 0.48"

Runoff by SCS TR-20 method, UH=SCS, Weighted-Q, Time Span= 0.00-48.00 hrs, dt= 0.10 hrs
Type III 24-hr 25-YEAR Rainfall=5.40", Ia/S=0.18

	Area (sf)	CN	Description
	78,390	30	Woods, Good, HSG A
*	605	98	Pavement
	32,506	39	>75% Grass cover, Good, HSG A
	606	98	Unconnected roofs, HSG A
	7,035	96	Gravel surface, HSG A
	119,142		Weighted Average
	117,931		98.98% Pervious Area
	1,211		1.02% Impervious Area
	606		50.04% Unconnected

Tc (min)	Length (feet)	Slope (ft/ft)	Velocity (ft/sec)	Capacity (cfs)	Description
6.0					**Direct Entry, Tc calc - see Tc-2**

Summary for Subcatchment WS3: Southwesterly sub-catchment

Runoff = 2.50 cfs @ 12.09 hrs, Volume= 9,290 cf, Depth= 4.78"

Runoff by SCS TR-20 method, UH=SCS, Weighted-Q, Time Span= 0.00-48.00 hrs, dt= 0.10 hrs
Type III 24-hr 25-YEAR Rainfall=5.40", Ia/S=0.18

	Area (sf)	CN	Description
*	788	98	Pavement
	901	39	>75% Grass cover, Good, HSG A
	755	98	Roofs, HSG A
	20,892	96	Gravel surface, HSG A
	23,336		Weighted Average
	21,793		93.39% Pervious Area
	1,543		6.61% Impervious Area

Tc (min)	Length (feet)	Slope (ft/ft)	Velocity (ft/sec)	Capacity (cfs)	Description
6.0					**Direct Entry, Tc calc - see Tc-3**

Summary for Subcatchment WS4: Northwesterly sub-catchment

Runoff = 0.32 cfs @ 12.09 hrs, Volume= 1,201 cf, Depth= 3.86"

Runoff by SCS TR-20 method, UH=SCS, Weighted-Q, Time Span= 0.00-48.00 hrs, dt= 0.10 hrs
Type III 24-hr 25-YEAR Rainfall=5.40", Ia/S=0.18

Area (sf)	CN	Description
509	98	Roofs, HSG A
2,320	96	Gravel surface, HSG A
902	39	>75% Grass cover, Good, HSG A
3,731		Weighted Average
3,222		86.36% Pervious Area
509		13.64% Impervious Area

Tc (min)	Length (feet)	Slope (ft/ft)	Velocity (ft/sec)	Capacity (cfs)	Description
6.0					**Direct Entry, Tc calc - see Tc-4**

Summary for Link AP1:

Inflow Area = 41,342 sf, 1.74% Impervious, Inflow Depth = 0.26" for 25-YEAR event
Inflow = 0.16 cfs @ 12.10 hrs, Volume= 884 cf
Primary = 0.16 cfs @ 12.10 hrs, Volume= 884 cf, Atten= 0%, Lag= 0.0 min

Primary outflow = Inflow, Time Span= 0.00-48.00 hrs, dt= 0.10 hrs

Summary for Link AP2:

Inflow Area = 119,142 sf, 1.02% Impervious, Inflow Depth = 0.48" for 25-YEAR event
Inflow = 0.95 cfs @ 12.10 hrs, Volume= 4,793 cf
Primary = 0.95 cfs @ 12.10 hrs, Volume= 4,793 cf, Atten= 0%, Lag= 0.0 min

Primary outflow = Inflow, Time Span= 0.00-48.00 hrs, dt= 0.10 hrs

Summary for Link AP3:

Inflow Area = 23,336 sf, 6.61% Impervious, Inflow Depth = 4.78" for 25-YEAR event
Inflow = 2.50 cfs @ 12.09 hrs, Volume= 9,290 cf
Primary = 2.50 cfs @ 12.09 hrs, Volume= 9,290 cf, Atten= 0%, Lag= 0.0 min

Primary outflow = Inflow, Time Span= 0.00-48.00 hrs, dt= 0.10 hrs

Summary for Link AP4:

Inflow Area = 3,731 sf, 13.64% Impervious, Inflow Depth = 3.86" for 25-YEAR event
Inflow = 0.32 cfs @ 12.09 hrs, Volume= 1,201 cf
Primary = 0.32 cfs @ 12.09 hrs, Volume= 1,201 cf, Atten= 0%, Lag= 0.0 min

Primary outflow = Inflow, Time Span= 0.00-48.00 hrs, dt= 0.10 hrs

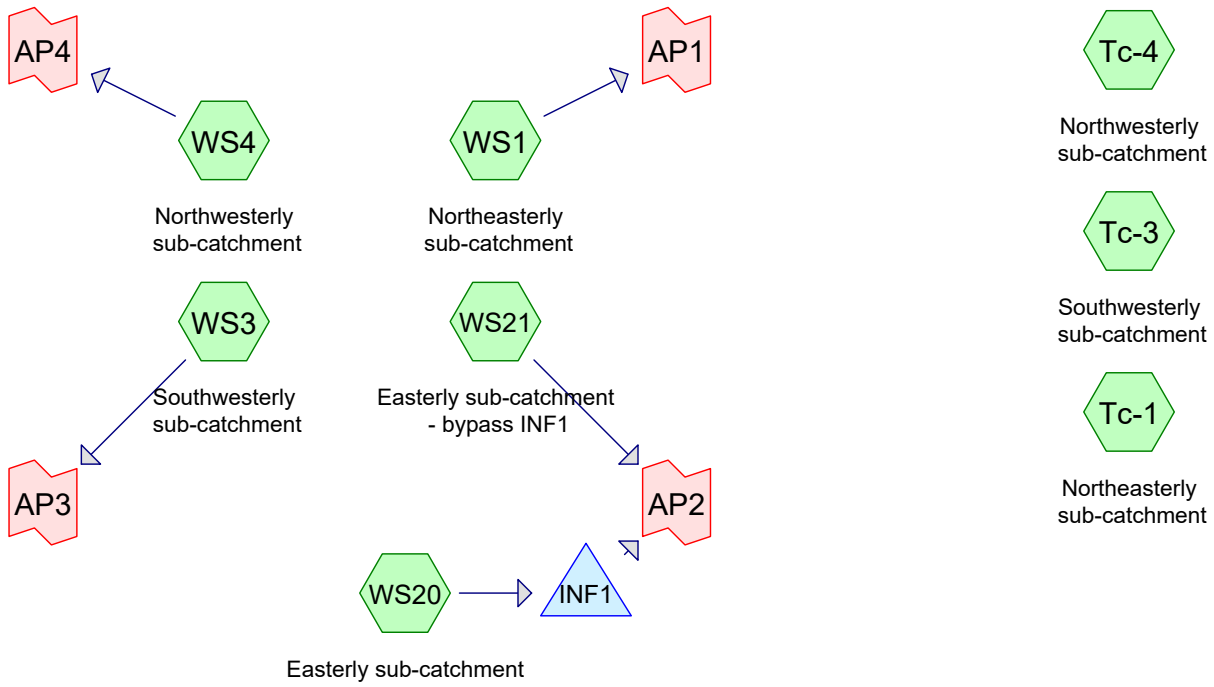

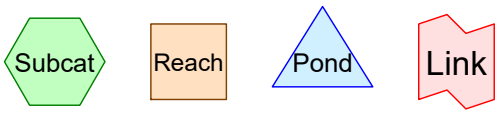

Routing Diagram for 17080 - Post-Dev
Prepared by {enter your company name here}, Printed 6/19/2018
HydroCAD® 10.00-22 s/n 09237 © 2018 HydroCAD Software Solutions LLC

Time span=0.00-48.00 hrs, dt=0.10 hrs, 481 points x 2
Runoff by SCS TR-20 method, UH=SCS, Weighted-Q
Reach routing by Dyn-Stor-Ind method - Pond routing by Dyn-Stor-Ind method

Subcatchment Tc-1: Northeasterly Runoff Area=7 sf 42.86% Impervious Runoff Depth=1.55"
Flow Length=452' Tc=6.0 min CN=WQ Runoff=0.00 cfs 1 cf

Subcatchment Tc-3: Southwesterly Runoff Area=4 sf 50.00% Impervious Runoff Depth=2.03"
Flow Length=276' Tc=6.0 min CN=WQ Runoff=0.00 cfs 1 cf

Subcatchment Tc-4: Northwesterly Runoff Area=3 sf 33.33% Impervious Runoff Depth=1.78"
Flow Length=45' Tc=6.0 min CN=WQ Runoff=0.00 cfs 0 cf

Subcatchment WS1: Northeasterly Runoff Area=41,296 sf 1.75% Impervious Runoff Depth=0.09"
Tc=6.0 min CN=WQ Runoff=0.08 cfs 309 cf

Subcatchment WS20: Easterly Runoff Area=65,273 sf 48.21% Impervious Runoff Depth=1.56"
Flow Length=417' Tc=10.9 min CN=WQ Runoff=1.97 cfs 8,481 cf

Subcatchment WS21: Easterly Runoff Area=53,914 sf 0.00% Impervious Runoff Depth=0.07"
Flow Length=173' Tc=17.5 min CN=WQ Runoff=0.06 cfs 296 cf

Subcatchment WS3: Southwesterly Runoff Area=23,336 sf 6.61% Impervious Runoff Depth=2.48"
Tc=6.0 min CN=WQ Runoff=1.35 cfs 4,814 cf

Subcatchment WS4: Northwesterly Runoff Area=3,731 sf 13.64% Impervious Runoff Depth=1.97"
Tc=6.0 min CN=WQ Runoff=0.17 cfs 613 cf

Pond INF1: Peak Elev=326.07' Storage=2,118 cf Inflow=1.97 cfs 8,481 cf
Discarded=0.49 cfs 8,493 cf Primary=0.00 cfs 0 cf Outflow=0.49 cfs 8,493 cf

Link AP1: Inflow=0.08 cfs 309 cf
Primary=0.08 cfs 309 cf

Link AP2: Inflow=0.06 cfs 296 cf
Primary=0.06 cfs 296 cf

Link AP3: Inflow=1.35 cfs 4,814 cf
Primary=1.35 cfs 4,814 cf

Link AP4: Inflow=0.17 cfs 613 cf
Primary=0.17 cfs 613 cf

Total Runoff Area = 187,564 sf Runoff Volume = 14,514 cf Average Runoff Depth = 0.93"
81.74% Pervious = 153,320 sf 18.26% Impervious = 34,244 sf

Summary for Subcatchment Tc-1: Northeasterly sub-catchment

Runoff = 0.00 cfs @ 12.09 hrs, Volume= 1 cf, Depth= 1.55"

Runoff by SCS TR-20 method, UH=SCS, Weighted-Q, Time Span= 0.00-48.00 hrs, dt= 0.10 hrs
Type III 24-hr 2-YEAR Rainfall=3.00", Ia/S=0.18

	Area (sf)	CN	Description
*	1	96	Existing Gravel surface, HSG A
*	1	39	Existing >75% Grass cover, Good, HSG A
	1	30	Woods, Good, HSG A
*	1	98	Existing Building
*	1	98	Proposed Building
*	1	39	Proposed >75% Grass cover, Good, HSG A
	1	98	Paved parking, HSG A
	7		Weighted Average
	4		57.14% Pervious Area
	3		42.86% Impervious Area

Tc (min)	Length (feet)	Slope (ft/ft)	Velocity (ft/sec)	Capacity (cfs)	Description
0.5	33	0.0200	1.07		**Sheet Flow, Seg A to B** Smooth surfaces n= 0.011 P2= 3.00"
1.4	101	0.0582	1.21		**Shallow Concentrated Flow, Seg B to C** Woodland Kv= 5.0 fps
0.7	280	0.0183	6.56	29.52	**Trap/Vee/Rect Channel Flow, Seg C to D** Bot.W=2.00' D=1.00' Z= 2.0 & 3.0 '/' Top.W=7.00' n= 0.022 Earth, clean & straight
0.1	38	0.0262	7.85	35.32	**Trap/Vee/Rect Channel Flow, Seg D to E** Bot.W=2.00' D=1.00' Z= 2.0 & 3.0 '/' Top.W=7.00' n= 0.022 Earth, clean & straight
2.7	452	Total, Increased to minimum Tc = 6.0 min			

Summary for Subcatchment Tc-3: Southwesterly sub-catchment

Runoff = 0.00 cfs @ 12.09 hrs, Volume= 1 cf, Depth= 2.03"

Runoff by SCS TR-20 method, UH=SCS, Weighted-Q, Time Span= 0.00-48.00 hrs, dt= 0.10 hrs
Type III 24-hr 2-YEAR Rainfall=3.00", Ia/S=0.18

	Area (sf)	CN	Description
*	1	98	Existing Pavement
	1	39	>75% Grass cover, Good, HSG A
	1	98	Roofs, HSG A
*	1	96	Existing Gravel surface, HSG A
	4		Weighted Average
	2		50.00% Pervious Area
	2		50.00% Impervious Area

Tc (min)	Length (feet)	Slope (ft/ft)	Velocity (ft/sec)	Capacity (cfs)	Description
1.3	150	0.0430	1.96		**Sheet Flow, Seg A to B** Smooth surfaces n= 0.011 P2= 3.00"
1.1	126	0.0140	1.90		**Shallow Concentrated Flow, Seg B to C** Unpaved Kv= 16.1 fps
2.4	276	Total, Increased to minimum Tc = 6.0 min			

Summary for Subcatchment Tc-4: Northwesterly sub-catchment

Runoff = 0.00 cfs @ 12.09 hrs, Volume= 0 cf, Depth= 1.78"

Runoff by SCS TR-20 method, UH=SCS, Weighted-Q, Time Span= 0.00-48.00 hrs, dt= 0.10 hrs
Type III 24-hr 2-YEAR Rainfall=3.00", Ia/S=0.18

	Area (sf)	CN	Description
*	1	98	Existing Roofs, HSG A
*	1	96	Existing Gravel surface, HSG A
*	1	39	Existing >75% Grass cover, Good, HSG A
	3		Weighted Average
	2		66.67% Pervious Area
	1		33.33% Impervious Area

Tc (min)	Length (feet)	Slope (ft/ft)	Velocity (ft/sec)	Capacity (cfs)	Description
1.2	37	0.0668	0.53		**Sheet Flow, Seg A to B** Fallow n= 0.050 P2= 3.00"
0.0	8	0.0831	4.64		**Shallow Concentrated Flow, Seg B to C** Unpaved Kv= 16.1 fps
1.2	45	Total, Increased to minimum Tc = 6.0 min			

Summary for Subcatchment WS1: Northeasterly sub-catchment

Runoff = 0.08 cfs @ 12.09 hrs, Volume= 309 cf, Depth= 0.09"

Runoff by SCS TR-20 method, UH=SCS, Weighted-Q, Time Span= 0.00-48.00 hrs, dt= 0.10 hrs
Type III 24-hr 2-YEAR Rainfall=3.00", Ia/S=0.18

	Area (sf)	CN	Description
	662	96	Gravel surface, HSG A
	4,118	39	>75% Grass cover, Good, HSG A
	35,795	30	Woods, Good, HSG A
*	721	98	Building
	41,296		Weighted Average
	40,575		98.25% Pervious Area
	721		1.75% Impervious Area

Tc (min)	Length (feet)	Slope (ft/ft)	Velocity (ft/sec)	Capacity (cfs)	Description
6.0					**Direct Entry, Tc calc - see Tc-1**

Summary for Subcatchment WS20: Easterly sub-catchment

Runoff = 1.97 cfs @ 12.15 hrs, Volume= 8,481 cf, Depth= 1.56"

Runoff by SCS TR-20 method, UH=SCS, Weighted-Q, Time Span= 0.00-48.00 hrs, dt= 0.10 hrs
Type III 24-hr 2-YEAR Rainfall=3.00", Ia/S=0.18

	Area (sf)	CN	Description
	3,013	30	Woods, Good, HSG A
*	605	98	Existing Pavement
*	17,466	39	Existing >75% Grass cover, Good, HSG A
*	7,673	39	Proposed >75% Grass cover, Good, HSG A
*	606	98	Existing Roofs, HSG A
*	12,000	98	Proposed Roofs, HSG A
*	5,656	96	Existing Gravel surface, HSG A
*	18,254	98	Proposed Paved parking, HSG A
	65,273		Weighted Average
	33,808		51.79% Pervious Area
	31,465		48.21% Impervious Area

Tc (min)	Length (feet)	Slope (ft/ft)	Velocity (ft/sec)	Capacity (cfs)	Description
0.6	61	0.0476	1.71		**Sheet Flow, Seg A to B** Smooth surfaces n= 0.011 P2= 3.00"
8.0	89	0.0281	0.18		**Sheet Flow, Seg B to C** Grass: Short n= 0.150 P2= 3.00"
1.8	149	0.0074	1.38		**Shallow Concentrated Flow, Seg C to D** Unpaved Kv= 16.1 fps
0.2	54	0.0184	5.74	28.70	**Trap/Vee/Rect Channel Flow, Seg D to E** Bot.W=2.00' D=1.00' Z= 3.0 '/' Top.W=8.00' n= 0.025 Earth, clean & winding
0.3	64	0.0781	4.19		**Shallow Concentrated Flow, Seg E to F** Grassed Waterway Kv= 15.0 fps
10.9	417	Total			

Summary for Subcatchment WS21: Easterly sub-catchment - bypass INF1

Runoff = 0.06 cfs @ 12.23 hrs, Volume= 296 cf, Depth= 0.07"

Runoff by SCS TR-20 method, UH=SCS, Weighted-Q, Time Span= 0.00-48.00 hrs, dt= 0.10 hrs
Type III 24-hr 2-YEAR Rainfall=3.00", Ia/S=0.18

	Area (sf)	CN	Description
	43,869	30	Woods, Good, HSG A
	8,666	39	>75% Grass cover, Good, HSG A
*	1,379	96	Existing Gravel surface, HSG A
	53,914		Weighted Average
	53,914		100.00% Pervious Area

Tc (min)	Length (feet)	Slope (ft/ft)	Velocity (ft/sec)	Capacity (cfs)	Description
17.2	150	0.0853	0.15		**Sheet Flow, Seg A to B** Woods: Light underbrush n= 0.400 P2= 3.00"
0.3	23	0.0565	1.19		**Shallow Concentrated Flow, Seg B to C** Woodland Kv= 5.0 fps
17.5	173	Total			

Summary for Subcatchment WS3: Southwesterly sub-catchment

Runoff = 1.35 cfs @ 12.09 hrs, Volume= 4,814 cf, Depth= 2.48"

Runoff by SCS TR-20 method, UH=SCS, Weighted-Q, Time Span= 0.00-48.00 hrs, dt= 0.10 hrs
Type III 24-hr 2-YEAR Rainfall=3.00", Ia/S=0.18

	Area (sf)	CN	Description
*	788	98	Pavement
	901	39	>75% Grass cover, Good, HSG A
	755	98	Roofs, HSG A
	20,892	96	Gravel surface, HSG A
	23,336		Weighted Average
	21,793		93.39% Pervious Area
	1,543		6.61% Impervious Area

Tc (min)	Length (feet)	Slope (ft/ft)	Velocity (ft/sec)	Capacity (cfs)	Description
6.0					**Direct Entry, Tc calc - see Tc-3**

Summary for Subcatchment WS4: Northwesterly sub-catchment

Runoff = 0.17 cfs @ 12.09 hrs, Volume= 613 cf, Depth= 1.97"

Runoff by SCS TR-20 method, UH=SCS, Weighted-Q, Time Span= 0.00-48.00 hrs, dt= 0.10 hrs
Type III 24-hr 2-YEAR Rainfall=3.00", Ia/S=0.18

	Area (sf)	CN	Description
*	509	98	Existing Roofs, HSG A
*	2,320	96	Existing Gravel surface, HSG A
*	902	39	Existing >75% Grass cover, Good, HSG A
	3,731		Weighted Average
	3,222		86.36% Pervious Area
	509		13.64% Impervious Area

Tc (min)	Length (feet)	Slope (ft/ft)	Velocity (ft/sec)	Capacity (cfs)	Description
6.0					**Direct Entry, Tc calc - see Tc-4**

Summary for Pond INF1:

Inflow Area = 65,273 sf, 48.21% Impervious, Inflow Depth = 1.56" for 2-YEAR event
Inflow = 1.97 cfs @ 12.15 hrs, Volume= 8,481 cf
Outflow = 0.49 cfs @ 12.60 hrs, Volume= 8,493 cf, Atten= 75%, Lag= 27.1 min
Discarded = 0.49 cfs @ 12.60 hrs, Volume= 8,493 cf
Primary = 0.00 cfs @ 0.00 hrs, Volume= 0 cf

Routing by Dyn-Stor-Ind method, Time Span= 0.00-48.00 hrs, dt= 0.10 hrs / 2
Peak Elev= 326.07' @ 12.60 hrs Surf.Area= 2,165 sf Storage= 2,118 cf

Plug-Flow detention time= (not calculated: outflow precedes inflow)
Center-of-Mass det. time= 25.7 min (790.2 - 764.5)

Volume	Invert	Avail.Storage	Storage Description
#1	325.00'	7,586 cf	**Custom Stage Data (Irregular)** Listed below (Recalc)

Elevation (feet)	Surf.Area (sq-ft)	Perim. (feet)	Inc.Store (cubic-feet)	Cum.Store (cubic-feet)	Wet.Area (sq-ft)
325.00	1,821	193.9	0	0	1,821
326.00	2,121	205.3	1,969	1,969	2,235
328.00	3,558	253.5	5,617	7,586	4,053

Device	Routing	Invert	Outlet Devices
#1	Discarded	325.00'	**8.270 in/hr Exfiltration over Surface area** Conductivity to Groundwater Elevation = 320.00'
#2	Primary	327.25'	**10.0' long x 3.0' breadth Broad-Crested Rectangular Weir** Head (feet) 0.20 0.40 0.60 0.80 1.00 1.20 1.40 1.60 1.80 2.00 2.50 3.00 3.50 4.00 4.50 Coef. (English) 2.44 2.58 2.68 2.67 2.65 2.64 2.64 2.68 2.68 2.72 2.81 2.92 2.97 3.07 3.32

Discarded OutFlow Max=0.49 cfs @ 12.60 hrs HW=326.07' (Free Discharge)
└**1=Exfiltration** (Controls 0.49 cfs)

Primary OutFlow Max=0.00 cfs @ 0.00 hrs HW=325.00' TW=0.00' (Dynamic Tailwater)
└**2=Broad-Crested Rectangular Weir** (Controls 0.00 cfs)

Summary for Link AP1:

Inflow Area = 41,296 sf, 1.75% Impervious, Inflow Depth = 0.09" for 2-YEAR event
Inflow = 0.08 cfs @ 12.09 hrs, Volume= 309 cf
Primary = 0.08 cfs @ 12.09 hrs, Volume= 309 cf, Atten= 0%, Lag= 0.0 min

Primary outflow = Inflow, Time Span= 0.00-48.00 hrs, dt= 0.10 hrs

Summary for Link AP2:

Inflow Area = 119,187 sf, 26.40% Impervious, Inflow Depth = 0.03" for 2-YEAR event
Inflow = 0.06 cfs @ 12.23 hrs, Volume= 296 cf
Primary = 0.06 cfs @ 12.23 hrs, Volume= 296 cf, Atten= 0%, Lag= 0.0 min

Primary outflow = Inflow, Time Span= 0.00-48.00 hrs, dt= 0.10 hrs

Summary for Link AP3:

Inflow Area = 23,336 sf, 6.61% Impervious, Inflow Depth = 2.48" for 2-YEAR event
Inflow = 1.35 cfs @ 12.09 hrs, Volume= 4,814 cf
Primary = 1.35 cfs @ 12.09 hrs, Volume= 4,814 cf, Atten= 0%, Lag= 0.0 min

Primary outflow = Inflow, Time Span= 0.00-48.00 hrs, dt= 0.10 hrs

Summary for Link AP4:

Inflow Area = 3,731 sf, 13.64% Impervious, Inflow Depth = 1.97" for 2-YEAR event
Inflow = 0.17 cfs @ 12.09 hrs, Volume= 613 cf
Primary = 0.17 cfs @ 12.09 hrs, Volume= 613 cf, Atten= 0%, Lag= 0.0 min

Primary outflow = Inflow, Time Span= 0.00-48.00 hrs, dt= 0.10 hrs

Time span=0.00-48.00 hrs, dt=0.10 hrs, 481 points x 2
Runoff by SCS TR-20 method, UH=SCS, Weighted-Q
Reach routing by Dyn-Stor-Ind method - Pond routing by Dyn-Stor-Ind method

Subcatchment Tc-1: Northeasterly Runoff Area=7 sf 42.86% Impervious Runoff Depth=2.33"
Flow Length=452' Tc=6.0 min CN=WQ Runoff=0.00 cfs 1 cf

Subcatchment Tc-3: Southwesterly Runoff Area=4 sf 50.00% Impervious Runoff Depth=3.03"
Flow Length=276' Tc=6.0 min CN=WQ Runoff=0.00 cfs 1 cf

Subcatchment Tc-4: Northwesterly Runoff Area=3 sf 33.33% Impervious Runoff Depth=2.68"
Flow Length=45' Tc=6.0 min CN=WQ Runoff=0.00 cfs 1 cf

Subcatchment WS1: Northeasterly Runoff Area=41,296 sf 1.75% Impervious Runoff Depth=0.15"
Tc=6.0 min CN=WQ Runoff=0.12 cfs 502 cf

Subcatchment WS20: Easterly Runoff Area=65,273 sf 48.21% Impervious Runoff Depth=2.34"
Flow Length=417' Tc=10.9 min CN=WQ Runoff=2.85 cfs 12,750 cf

Subcatchment WS21: Easterly Runoff Area=53,914 sf 0.00% Impervious Runoff Depth=0.12"
Flow Length=173' Tc=17.5 min CN=WQ Runoff=0.09 cfs 536 cf

Subcatchment WS3: Southwesterly Runoff Area=23,336 sf 6.61% Impervious Runoff Depth=3.72"
Tc=6.0 min CN=WQ Runoff=1.98 cfs 7,228 cf

Subcatchment WS4: Northwesterly Runoff Area=3,731 sf 13.64% Impervious Runoff Depth=2.98"
Tc=6.0 min CN=WQ Runoff=0.25 cfs 926 cf

Pond INF1: Peak Elev=326.68' Storage=3,551 cf Inflow=2.85 cfs 12,750 cf
Discarded=0.62 cfs 12,763 cf Primary=0.00 cfs 0 cf Outflow=0.62 cfs 12,763 cf

Link AP1: Inflow=0.12 cfs 502 cf
Primary=0.12 cfs 502 cf

Link AP2: Inflow=0.09 cfs 536 cf
Primary=0.09 cfs 536 cf

Link AP3: Inflow=1.98 cfs 7,228 cf
Primary=1.98 cfs 7,228 cf

Link AP4: Inflow=0.25 cfs 926 cf
Primary=0.25 cfs 926 cf

Total Runoff Area = 187,564 sf Runoff Volume = 21,946 cf Average Runoff Depth = 1.40"
81.74% Pervious = 153,320 sf 18.26% Impervious = 34,244 sf

Summary for Subcatchment Tc-1: Northeasterly sub-catchment

Runoff = 0.00 cfs @ 12.09 hrs, Volume= 1 cf, Depth= 2.33"

Runoff by SCS TR-20 method, UH=SCS, Weighted-Q, Time Span= 0.00-48.00 hrs, dt= 0.10 hrs
Type III 24-hr 10-YEAR Rainfall=4.30", Ia/S=0.18

	Area (sf)	CN	Description
*	1	96	Existing Gravel surface, HSG A
*	1	39	Existing >75% Grass cover, Good, HSG A
	1	30	Woods, Good, HSG A
*	1	98	Existing Building
*	1	98	Proposed Building
*	1	39	Proposed >75% Grass cover, Good, HSG A
	1	98	Paved parking, HSG A
	7		Weighted Average
	4		57.14% Pervious Area
	3		42.86% Impervious Area

Tc (min)	Length (feet)	Slope (ft/ft)	Velocity (ft/sec)	Capacity (cfs)	Description
0.5	33	0.0200	1.07		**Sheet Flow, Seg A to B** Smooth surfaces n= 0.011 P2= 3.00"
1.4	101	0.0582	1.21		**Shallow Concentrated Flow, Seg B to C** Woodland Kv= 5.0 fps
0.7	280	0.0183	6.56	29.52	**Trap/Vee/Rect Channel Flow, Seg C to D** Bot.W=2.00' D=1.00' Z= 2.0 & 3.0 '/' Top.W=7.00' n= 0.022 Earth, clean & straight
0.1	38	0.0262	7.85	35.32	**Trap/Vee/Rect Channel Flow, Seg D to E** Bot.W=2.00' D=1.00' Z= 2.0 & 3.0 '/' Top.W=7.00' n= 0.022 Earth, clean & straight
2.7	452	Total, Increased to minimum Tc = 6.0 min			

Summary for Subcatchment Tc-3: Southwesterly sub-catchment

Runoff = 0.00 cfs @ 12.09 hrs, Volume= 1 cf, Depth= 3.03"

Runoff by SCS TR-20 method, UH=SCS, Weighted-Q, Time Span= 0.00-48.00 hrs, dt= 0.10 hrs
Type III 24-hr 10-YEAR Rainfall=4.30", Ia/S=0.18

	Area (sf)	CN	Description
*	1	98	Existing Pavement
	1	39	>75% Grass cover, Good, HSG A
	1	98	Roofs, HSG A
*	1	96	Existing Gravel surface, HSG A
	4		Weighted Average
	2		50.00% Pervious Area
	2		50.00% Impervious Area

Tc (min)	Length (feet)	Slope (ft/ft)	Velocity (ft/sec)	Capacity (cfs)	Description
1.3	150	0.0430	1.96		**Sheet Flow, Seg A to B** Smooth surfaces n= 0.011 P2= 3.00"
1.1	126	0.0140	1.90		**Shallow Concentrated Flow, Seg B to C** Unpaved Kv= 16.1 fps
2.4	276	Total, Increased to minimum Tc = 6.0 min			

Summary for Subcatchment Tc-4: Northwesterly sub-catchment

Runoff = 0.00 cfs @ 12.09 hrs, Volume= 1 cf, Depth= 2.68"

Runoff by SCS TR-20 method, UH=SCS, Weighted-Q, Time Span= 0.00-48.00 hrs, dt= 0.10 hrs
Type III 24-hr 10-YEAR Rainfall=4.30", Ia/S=0.18

	Area (sf)	CN	Description
*	1	98	Existing Roofs, HSG A
*	1	96	Existing Gravel surface, HSG A
*	1	39	Existing >75% Grass cover, Good, HSG A
	3		Weighted Average
	2		66.67% Pervious Area
	1		33.33% Impervious Area

Tc (min)	Length (feet)	Slope (ft/ft)	Velocity (ft/sec)	Capacity (cfs)	Description
1.2	37	0.0668	0.53		**Sheet Flow, Seg A to B** Fallow n= 0.050 P2= 3.00"
0.0	8	0.0831	4.64		**Shallow Concentrated Flow, Seg B to C** Unpaved Kv= 16.1 fps
1.2	45	Total, Increased to minimum Tc = 6.0 min			

Summary for Subcatchment WS1: Northeasterly sub-catchment

Runoff = 0.12 cfs @ 12.09 hrs, Volume= 502 cf, Depth= 0.15"

Runoff by SCS TR-20 method, UH=SCS, Weighted-Q, Time Span= 0.00-48.00 hrs, dt= 0.10 hrs
Type III 24-hr 10-YEAR Rainfall=4.30", Ia/S=0.18

	Area (sf)	CN	Description
	662	96	Gravel surface, HSG A
	4,118	39	>75% Grass cover, Good, HSG A
	35,795	30	Woods, Good, HSG A
*	721	98	Building
	41,296		Weighted Average
	40,575		98.25% Pervious Area
	721		1.75% Impervious Area

Tc (min)	Length (feet)	Slope (ft/ft)	Velocity (ft/sec)	Capacity (cfs)	Description
6.0					**Direct Entry, Tc calc - see Tc-1**

Summary for Subcatchment WS20: Easterly sub-catchment

Runoff = 2.85 cfs @ 12.15 hrs, Volume= 12,750 cf, Depth= 2.34"

Runoff by SCS TR-20 method, UH=SCS, Weighted-Q, Time Span= 0.00-48.00 hrs, dt= 0.10 hrs
Type III 24-hr 10-YEAR Rainfall=4.30", Ia/S=0.18

	Area (sf)	CN	Description
	3,013	30	Woods, Good, HSG A
*	605	98	Existing Pavement
*	17,466	39	Existing >75% Grass cover, Good, HSG A
*	7,673	39	Proposed >75% Grass cover, Good, HSG A
*	606	98	Existing Roofs, HSG A
*	12,000	98	Proposed Roofs, HSG A
*	5,656	96	Existing Gravel surface, HSG A
*	18,254	98	Proposed Paved parking, HSG A
	65,273		Weighted Average
	33,808		51.79% Pervious Area
	31,465		48.21% Impervious Area

Tc (min)	Length (feet)	Slope (ft/ft)	Velocity (ft/sec)	Capacity (cfs)	Description
0.6	61	0.0476	1.71		**Sheet Flow, Seg A to B** Smooth surfaces n= 0.011 P2= 3.00"
8.0	89	0.0281	0.18		**Sheet Flow, Seg B to C** Grass: Short n= 0.150 P2= 3.00"
1.8	149	0.0074	1.38		**Shallow Concentrated Flow, Seg C to D** Unpaved Kv= 16.1 fps
0.2	54	0.0184	5.74	28.70	**Trap/Vee/Rect Channel Flow, Seg D to E** Bot.W=2.00' D=1.00' Z= 3.0 '/' Top.W=8.00' n= 0.025 Earth, clean & winding
0.3	64	0.0781	4.19		**Shallow Concentrated Flow, Seg E to F** Grassed Waterway Kv= 15.0 fps
10.9	417	Total			

Summary for Subcatchment WS21: Easterly sub-catchment - bypass INF1

Runoff = 0.09 cfs @ 12.23 hrs, Volume= 536 cf, Depth= 0.12"

Runoff by SCS TR-20 method, UH=SCS, Weighted-Q, Time Span= 0.00-48.00 hrs, dt= 0.10 hrs
Type III 24-hr 10-YEAR Rainfall=4.30", Ia/S=0.18

	Area (sf)	CN	Description
	43,869	30	Woods, Good, HSG A
	8,666	39	>75% Grass cover, Good, HSG A
*	1,379	96	Existing Gravel surface, HSG A
	53,914		Weighted Average
	53,914		100.00% Pervious Area

Tc (min)	Length (feet)	Slope (ft/ft)	Velocity (ft/sec)	Capacity (cfs)	Description
17.2	150	0.0853	0.15		**Sheet Flow, Seg A to B** Woods: Light underbrush n= 0.400 P2= 3.00"
0.3	23	0.0565	1.19		**Shallow Concentrated Flow, Seg B to C** Woodland Kv= 5.0 fps
17.5	173	Total			

Summary for Subcatchment WS3: Southwesterly sub-catchment

Runoff = 1.98 cfs @ 12.09 hrs, Volume= 7,228 cf, Depth= 3.72"

Runoff by SCS TR-20 method, UH=SCS, Weighted-Q, Time Span= 0.00-48.00 hrs, dt= 0.10 hrs
Type III 24-hr 10-YEAR Rainfall=4.30", Ia/S=0.18

	Area (sf)	CN	Description
*	788	98	Pavement
	901	39	>75% Grass cover, Good, HSG A
	755	98	Roofs, HSG A
	20,892	96	Gravel surface, HSG A
	23,336		Weighted Average
	21,793		93.39% Pervious Area
	1,543		6.61% Impervious Area

Tc (min)	Length (feet)	Slope (ft/ft)	Velocity (ft/sec)	Capacity (cfs)	Description
6.0					**Direct Entry, Tc calc - see Tc-3**

Summary for Subcatchment WS4: Northwesterly sub-catchment

Runoff = 0.25 cfs @ 12.09 hrs, Volume= 926 cf, Depth= 2.98"

Runoff by SCS TR-20 method, UH=SCS, Weighted-Q, Time Span= 0.00-48.00 hrs, dt= 0.10 hrs
Type III 24-hr 10-YEAR Rainfall=4.30", Ia/S=0.18

	Area (sf)	CN	Description
*	509	98	Existing Roofs, HSG A
*	2,320	96	Existing Gravel surface, HSG A
*	902	39	Existing >75% Grass cover, Good, HSG A
	3,731		Weighted Average
	3,222		86.36% Pervious Area
	509		13.64% Impervious Area

Tc (min)	Length (feet)	Slope (ft/ft)	Velocity (ft/sec)	Capacity (cfs)	Description
6.0					**Direct Entry, Tc calc - see Tc-4**

Summary for Pond INF1:

Inflow Area = 65,273 sf, 48.21% Impervious, Inflow Depth = 2.34" for 10-YEAR event
Inflow = 2.85 cfs @ 12.15 hrs, Volume= 12,750 cf
Outflow = 0.62 cfs @ 12.64 hrs, Volume= 12,763 cf, Atten= 78%, Lag= 29.4 min
Discarded = 0.62 cfs @ 12.64 hrs, Volume= 12,763 cf
Primary = 0.00 cfs @ 0.00 hrs, Volume= 0 cf

Routing by Dyn-Stor-Ind method, Time Span= 0.00-48.00 hrs, dt= 0.10 hrs / 2
Peak Elev= 326.68' @ 12.64 hrs Surf.Area= 2,565 sf Storage= 3,551 cf

Plug-Flow detention time= (not calculated: outflow precedes inflow)
Center-of-Mass det. time= 39.4 min (802.0 - 762.7)

Volume	Invert	Avail.Storage	Storage Description
#1	325.00'	7,586 cf	**Custom Stage Data (Irregular)** Listed below (Recalc)

Elevation (feet)	Surf.Area (sq-ft)	Perim. (feet)	Inc.Store (cubic-feet)	Cum.Store (cubic-feet)	Wet.Area (sq-ft)
325.00	1,821	193.9	0	0	1,821
326.00	2,121	205.3	1,969	1,969	2,235
328.00	3,558	253.5	5,617	7,586	4,053

Device	Routing	Invert	Outlet Devices
#1	Discarded	325.00'	**8.270 in/hr Exfiltration over Surface area** Conductivity to Groundwater Elevation = 320.00'
#2	Primary	327.25'	**10.0' long x 3.0' breadth Broad-Crested Rectangular Weir** Head (feet) 0.20 0.40 0.60 0.80 1.00 1.20 1.40 1.60 1.80 2.00 2.50 3.00 3.50 4.00 4.50 Coef. (English) 2.44 2.58 2.68 2.67 2.65 2.64 2.64 2.68 2.68 2.72 2.81 2.92 2.97 3.07 3.32

Discarded OutFlow Max=0.62 cfs @ 12.64 hrs HW=326.67' (Free Discharge)
└**1=Exfiltration** (Controls 0.62 cfs)

Primary OutFlow Max=0.00 cfs @ 0.00 hrs HW=325.00' TW=0.00' (Dynamic Tailwater)
└**2=Broad-Crested Rectangular Weir** (Controls 0.00 cfs)

Summary for Link AP1:

Inflow Area = 41,296 sf, 1.75% Impervious, Inflow Depth = 0.15" for 10-YEAR event
Inflow = 0.12 cfs @ 12.09 hrs, Volume= 502 cf
Primary = 0.12 cfs @ 12.09 hrs, Volume= 502 cf, Atten= 0%, Lag= 0.0 min

Primary outflow = Inflow, Time Span= 0.00-48.00 hrs, dt= 0.10 hrs

Summary for Link AP2:

Inflow Area = 119,187 sf, 26.40% Impervious, Inflow Depth = 0.05" for 10-YEAR event
Inflow = 0.09 cfs @ 12.23 hrs, Volume= 536 cf
Primary = 0.09 cfs @ 12.23 hrs, Volume= 536 cf, Atten= 0%, Lag= 0.0 min

Primary outflow = Inflow, Time Span= 0.00-48.00 hrs, dt= 0.10 hrs

Summary for Link AP3:

Inflow Area = 23,336 sf, 6.61% Impervious, Inflow Depth = 3.72" for 10-YEAR event
Inflow = 1.98 cfs @ 12.09 hrs, Volume= 7,228 cf
Primary = 1.98 cfs @ 12.09 hrs, Volume= 7,228 cf, Atten= 0%, Lag= 0.0 min

Primary outflow = Inflow, Time Span= 0.00-48.00 hrs, dt= 0.10 hrs

Summary for Link AP4:

Inflow Area = 3,731 sf, 13.64% Impervious, Inflow Depth = 2.98" for 10-YEAR event
Inflow = 0.25 cfs @ 12.09 hrs, Volume= 926 cf
Primary = 0.25 cfs @ 12.09 hrs, Volume= 926 cf, Atten= 0%, Lag= 0.0 min

Primary outflow = Inflow, Time Span= 0.00-48.00 hrs, dt= 0.10 hrs

Time span=0.00-48.00 hrs, dt=0.10 hrs, 481 points x 2
Runoff by SCS TR-20 method, UH=SCS, Weighted-Q
Reach routing by Dyn-Stor-Ind method - Pond routing by Dyn-Stor-Ind method

Subcatchment Tc-1: Northeasterly Runoff Area=7 sf 42.86% Impervious Runoff Depth=3.03"
Flow Length=452' Tc=6.0 min CN=WQ Runoff=0.00 cfs 2 cf

Subcatchment Tc-3: Southwesterly Runoff Area=4 sf 50.00% Impervious Runoff Depth=3.91"
Flow Length=276' Tc=6.0 min CN=WQ Runoff=0.00 cfs 1 cf

Subcatchment Tc-4: Northwesterly Runoff Area=3 sf 33.33% Impervious Runoff Depth=3.49"
Flow Length=45' Tc=6.0 min CN=WQ Runoff=0.00 cfs 1 cf

Subcatchment WS1: Northeasterly Runoff Area=41,296 sf 1.75% Impervious Runoff Depth=0.26"
Tc=6.0 min CN=WQ Runoff=0.16 cfs 884 cf

Subcatchment WS20: Easterly Runoff Area=65,273 sf 48.21% Impervious Runoff Depth=3.06"
Flow Length=417' Tc=10.9 min CN=WQ Runoff=3.61 cfs 16,658 cf

Subcatchment WS21: Easterly Runoff Area=53,914 sf 0.00% Impervious Runoff Depth=0.23"
Flow Length=173' Tc=17.5 min CN=WQ Runoff=0.12 cfs 1,047 cf

Subcatchment WS3: Southwesterly Runoff Area=23,336 sf 6.61% Impervious Runoff Depth=4.78"
Tc=6.0 min CN=WQ Runoff=2.50 cfs 9,290 cf

Subcatchment WS4: Northwesterly Runoff Area=3,731 sf 13.64% Impervious Runoff Depth=3.86"
Tc=6.0 min CN=WQ Runoff=0.32 cfs 1,201 cf

Pond INF1: Peak Elev=327.18' Storage=4,920 cf Inflow=3.61 cfs 16,658 cf
Discarded=0.74 cfs 16,680 cf Primary=0.00 cfs 0 cf Outflow=0.74 cfs 16,680 cf

Link AP1: Inflow=0.16 cfs 884 cf
Primary=0.16 cfs 884 cf

Link AP2: Inflow=0.12 cfs 1,047 cf
Primary=0.12 cfs 1,047 cf

Link AP3: Inflow=2.50 cfs 9,290 cf
Primary=2.50 cfs 9,290 cf

Link AP4: Inflow=0.32 cfs 1,201 cf
Primary=0.32 cfs 1,201 cf

Total Runoff Area = 187,564 sf Runoff Volume = 29,084 cf Average Runoff Depth = 1.86"
81.74% Pervious = 153,320 sf 18.26% Impervious = 34,244 sf

Summary for Subcatchment Tc-1: Northeasterly sub-catchment

Runoff = 0.00 cfs @ 12.09 hrs, Volume= 2 cf, Depth= 3.03"

Runoff by SCS TR-20 method, UH=SCS, Weighted-Q, Time Span= 0.00-48.00 hrs, dt= 0.10 hrs
Type III 24-hr 25-YEAR Rainfall=5.40", Ia/S=0.18

	Area (sf)	CN	Description
*	1	96	Existing Gravel surface, HSG A
*	1	39	Existing >75% Grass cover, Good, HSG A
	1	30	Woods, Good, HSG A
*	1	98	Existing Building
*	1	98	Proposed Building
*	1	39	Proposed >75% Grass cover, Good, HSG A
	1	98	Paved parking, HSG A
	7		Weighted Average
	4		57.14% Pervious Area
	3		42.86% Impervious Area

Tc (min)	Length (feet)	Slope (ft/ft)	Velocity (ft/sec)	Capacity (cfs)	Description
0.5	33	0.0200	1.07		**Sheet Flow, Seg A to B** Smooth surfaces n= 0.011 P2= 3.00"
1.4	101	0.0582	1.21		**Shallow Concentrated Flow, Seg B to C** Woodland Kv= 5.0 fps
0.7	280	0.0183	6.56	29.52	**Trap/Vee/Rect Channel Flow, Seg C to D** Bot.W=2.00' D=1.00' Z= 2.0 & 3.0 '/' Top.W=7.00' n= 0.022 Earth, clean & straight
0.1	38	0.0262	7.85	35.32	**Trap/Vee/Rect Channel Flow, Seg D to E** Bot.W=2.00' D=1.00' Z= 2.0 & 3.0 '/' Top.W=7.00' n= 0.022 Earth, clean & straight
2.7	452	Total, Increased to minimum Tc = 6.0 min			

Summary for Subcatchment Tc-3: Southwesterly sub-catchment

Runoff = 0.00 cfs @ 12.09 hrs, Volume= 1 cf, Depth= 3.91"

Runoff by SCS TR-20 method, UH=SCS, Weighted-Q, Time Span= 0.00-48.00 hrs, dt= 0.10 hrs
Type III 24-hr 25-YEAR Rainfall=5.40", Ia/S=0.18

	Area (sf)	CN	Description
*	1	98	Existing Pavement
	1	39	>75% Grass cover, Good, HSG A
	1	98	Roofs, HSG A
*	1	96	Existing Gravel surface, HSG A
	4		Weighted Average
	2		50.00% Pervious Area
	2		50.00% Impervious Area

Tc (min)	Length (feet)	Slope (ft/ft)	Velocity (ft/sec)	Capacity (cfs)	Description
1.3	150	0.0430	1.96		**Sheet Flow, Seg A to B** Smooth surfaces n= 0.011 P2= 3.00"
1.1	126	0.0140	1.90		**Shallow Concentrated Flow, Seg B to C** Unpaved Kv= 16.1 fps
2.4	276	Total, Increased to minimum Tc = 6.0 min			

Summary for Subcatchment Tc-4: Northwesterly sub-catchment

Runoff = 0.00 cfs @ 12.09 hrs, Volume= 1 cf, Depth= 3.49"

Runoff by SCS TR-20 method, UH=SCS, Weighted-Q, Time Span= 0.00-48.00 hrs, dt= 0.10 hrs
Type III 24-hr 25-YEAR Rainfall=5.40", Ia/S=0.18

	Area (sf)	CN	Description
*	1	98	Existing Roofs, HSG A
*	1	96	Existing Gravel surface, HSG A
*	1	39	Existing >75% Grass cover, Good, HSG A
	3		Weighted Average
	2		66.67% Pervious Area
	1		33.33% Impervious Area

Tc (min)	Length (feet)	Slope (ft/ft)	Velocity (ft/sec)	Capacity (cfs)	Description
1.2	37	0.0668	0.53		**Sheet Flow, Seg A to B** Fallow n= 0.050 P2= 3.00"
0.0	8	0.0831	4.64		**Shallow Concentrated Flow, Seg B to C** Unpaved Kv= 16.1 fps
1.2	45	Total, Increased to minimum Tc = 6.0 min			

Summary for Subcatchment WS1: Northeasterly sub-catchment

Runoff = 0.16 cfs @ 12.10 hrs, Volume= 884 cf, Depth= 0.26"

Runoff by SCS TR-20 method, UH=SCS, Weighted-Q, Time Span= 0.00-48.00 hrs, dt= 0.10 hrs
Type III 24-hr 25-YEAR Rainfall=5.40", Ia/S=0.18

	Area (sf)	CN	Description
	662	96	Gravel surface, HSG A
	4,118	39	>75% Grass cover, Good, HSG A
	35,795	30	Woods, Good, HSG A
*	721	98	Building
	41,296		Weighted Average
	40,575		98.25% Pervious Area
	721		1.75% Impervious Area

Tc (min)	Length (feet)	Slope (ft/ft)	Velocity (ft/sec)	Capacity (cfs)	Description
6.0					**Direct Entry, Tc calc - see Tc-1**

Summary for Subcatchment WS20: Easterly sub-catchment

Runoff = 3.61 cfs @ 12.15 hrs, Volume= 16,658 cf, Depth= 3.06"

Runoff by SCS TR-20 method, UH=SCS, Weighted-Q, Time Span= 0.00-48.00 hrs, dt= 0.10 hrs
Type III 24-hr 25-YEAR Rainfall=5.40", Ia/S=0.18

	Area (sf)	CN	Description
	3,013	30	Woods, Good, HSG A
*	605	98	Existing Pavement
*	17,466	39	Existing >75% Grass cover, Good, HSG A
*	7,673	39	Proposed >75% Grass cover, Good, HSG A
*	606	98	Existing Roofs, HSG A
*	12,000	98	Proposed Roofs, HSG A
*	5,656	96	Existing Gravel surface, HSG A
*	18,254	98	Proposed Paved parking, HSG A
	65,273		Weighted Average
	33,808		51.79% Pervious Area
	31,465		48.21% Impervious Area

Tc (min)	Length (feet)	Slope (ft/ft)	Velocity (ft/sec)	Capacity (cfs)	Description
0.6	61	0.0476	1.71		**Sheet Flow, Seg A to B** Smooth surfaces n= 0.011 P2= 3.00"
8.0	89	0.0281	0.18		**Sheet Flow, Seg B to C** Grass: Short n= 0.150 P2= 3.00"
1.8	149	0.0074	1.38		**Shallow Concentrated Flow, Seg C to D** Unpaved Kv= 16.1 fps
0.2	54	0.0184	5.74	28.70	**Trap/Vee/Rect Channel Flow, Seg D to E** Bot.W=2.00' D=1.00' Z= 3.0 '/' Top.W=8.00' n= 0.025 Earth, clean & winding
0.3	64	0.0781	4.19		**Shallow Concentrated Flow, Seg E to F** Grassed Waterway Kv= 15.0 fps
10.9	417	Total			

Summary for Subcatchment WS21: Easterly sub-catchment - bypass INF1

Runoff = 0.12 cfs @ 12.26 hrs, Volume= 1,047 cf, Depth= 0.23"

Runoff by SCS TR-20 method, UH=SCS, Weighted-Q, Time Span= 0.00-48.00 hrs, dt= 0.10 hrs
Type III 24-hr 25-YEAR Rainfall=5.40", Ia/S=0.18

	Area (sf)	CN	Description
	43,869	30	Woods, Good, HSG A
	8,666	39	>75% Grass cover, Good, HSG A
*	1,379	96	Existing Gravel surface, HSG A
	53,914		Weighted Average
	53,914		100.00% Pervious Area

Tc (min)	Length (feet)	Slope (ft/ft)	Velocity (ft/sec)	Capacity (cfs)	Description
17.2	150	0.0853	0.15		**Sheet Flow, Seg A to B** Woods: Light underbrush n= 0.400 P2= 3.00"
0.3	23	0.0565	1.19		**Shallow Concentrated Flow, Seg B to C** Woodland Kv= 5.0 fps
17.5	173	Total			

Summary for Subcatchment WS3: Southwesterly sub-catchment

Runoff = 2.50 cfs @ 12.09 hrs, Volume= 9,290 cf, Depth= 4.78"

Runoff by SCS TR-20 method, UH=SCS, Weighted-Q, Time Span= 0.00-48.00 hrs, dt= 0.10 hrs
Type III 24-hr 25-YEAR Rainfall=5.40", Ia/S=0.18

	Area (sf)	CN	Description
*	788	98	Pavement
	901	39	>75% Grass cover, Good, HSG A
	755	98	Roofs, HSG A
	20,892	96	Gravel surface, HSG A
	23,336		Weighted Average
	21,793		93.39% Pervious Area
	1,543		6.61% Impervious Area

Tc (min)	Length (feet)	Slope (ft/ft)	Velocity (ft/sec)	Capacity (cfs)	Description
6.0					**Direct Entry, Tc calc - see Tc-3**

Summary for Subcatchment WS4: Northwesterly sub-catchment

Runoff = 0.32 cfs @ 12.09 hrs, Volume= 1,201 cf, Depth= 3.86"

Runoff by SCS TR-20 method, UH=SCS, Weighted-Q, Time Span= 0.00-48.00 hrs, dt= 0.10 hrs
Type III 24-hr 25-YEAR Rainfall=5.40", Ia/S=0.18

	Area (sf)	CN	Description
*	509	98	Existing Roofs, HSG A
*	2,320	96	Existing Gravel surface, HSG A
*	902	39	Existing >75% Grass cover, Good, HSG A
	3,731		Weighted Average
	3,222		86.36% Pervious Area
	509		13.64% Impervious Area

Tc (min)	Length (feet)	Slope (ft/ft)	Velocity (ft/sec)	Capacity (cfs)	Description
6.0					**Direct Entry, Tc calc - see Tc-4**

Summary for Pond INF1:

Inflow Area = 65,273 sf, 48.21% Impervious, Inflow Depth = 3.06" for 25-YEAR event
Inflow = 3.61 cfs @ 12.15 hrs, Volume= 16,658 cf
Outflow = 0.74 cfs @ 12.68 hrs, Volume= 16,680 cf, Atten= 79%, Lag= 31.6 min
Discarded = 0.74 cfs @ 12.68 hrs, Volume= 16,680 cf
Primary = 0.00 cfs @ 0.00 hrs, Volume= 0 cf

Routing by Dyn-Stor-Ind method, Time Span= 0.00-48.00 hrs, dt= 0.10 hrs / 2
Peak Elev= 327.18' @ 12.68 hrs Surf.Area= 2,921 sf Storage= 4,920 cf

Plug-Flow detention time= (not calculated: outflow precedes inflow)
Center-of-Mass det. time= 50.7 min (813.6 - 763.0)

Volume	Invert	Avail.Storage	Storage Description
#1	325.00'	7,586 cf	**Custom Stage Data (Irregular)** Listed below (Recalc)

Elevation (feet)	Surf.Area (sq-ft)	Perim. (feet)	Inc.Store (cubic-feet)	Cum.Store (cubic-feet)	Wet.Area (sq-ft)
325.00	1,821	193.9	0	0	1,821
326.00	2,121	205.3	1,969	1,969	2,235
328.00	3,558	253.5	5,617	7,586	4,053

Device	Routing	Invert	Outlet Devices
#1	Discarded	325.00'	**8.270 in/hr Exfiltration over Surface area** Conductivity to Groundwater Elevation = 320.00'
#2	Primary	327.25'	**10.0' long x 3.0' breadth Broad-Crested Rectangular Weir** Head (feet) 0.20 0.40 0.60 0.80 1.00 1.20 1.40 1.60 1.80 2.00 2.50 3.00 3.50 4.00 4.50 Coef. (English) 2.44 2.58 2.68 2.67 2.65 2.64 2.64 2.68 2.68 2.72 2.81 2.92 2.97 3.07 3.32

Discarded OutFlow Max=0.74 cfs @ 12.68 hrs HW=327.17' (Free Discharge)
└**1=Exfiltration** (Controls 0.74 cfs)

Primary OutFlow Max=0.00 cfs @ 0.00 hrs HW=325.00' TW=0.00' (Dynamic Tailwater)
└**2=Broad-Crested Rectangular Weir** (Controls 0.00 cfs)

Summary for Link AP1:

Inflow Area = 41,296 sf, 1.75% Impervious, Inflow Depth = 0.26" for 25-YEAR event
Inflow = 0.16 cfs @ 12.10 hrs, Volume= 884 cf
Primary = 0.16 cfs @ 12.10 hrs, Volume= 884 cf, Atten= 0%, Lag= 0.0 min

Primary outflow = Inflow, Time Span= 0.00-48.00 hrs, dt= 0.10 hrs

Summary for Link AP2:

Inflow Area = 119,187 sf, 26.40% Impervious, Inflow Depth = 0.11" for 25-YEAR event
Inflow = 0.12 cfs @ 12.26 hrs, Volume= 1,047 cf
Primary = 0.12 cfs @ 12.26 hrs, Volume= 1,047 cf, Atten= 0%, Lag= 0.0 min

Primary outflow = Inflow, Time Span= 0.00-48.00 hrs, dt= 0.10 hrs

Summary for Link AP3:

Inflow Area = 23,336 sf, 6.61% Impervious, Inflow Depth = 4.78" for 25-YEAR event
Inflow = 2.50 cfs @ 12.09 hrs, Volume= 9,290 cf
Primary = 2.50 cfs @ 12.09 hrs, Volume= 9,290 cf, Atten= 0%, Lag= 0.0 min

Primary outflow = Inflow, Time Span= 0.00-48.00 hrs, dt= 0.10 hrs

Summary for Link AP4:

Inflow Area = 3,731 sf, 13.64% Impervious, Inflow Depth = 3.86" for 25-YEAR event
Inflow = 0.32 cfs @ 12.09 hrs, Volume= 1,201 cf
Primary = 0.32 cfs @ 12.09 hrs, Volume= 1,201 cf, Atten= 0%, Lag= 0.0 min

Primary outflow = Inflow, Time Span= 0.00-48.00 hrs, dt= 0.10 hrs

ATTACHMENT 5

INSPECTION, MAINTENANCE AND HOUSEKEEPING PLAN

DM ROMA
CONSULTING ENGINEERS

INSPECTION, MAINTENANCE, AND HOUSEKEEPING PLAN

SELF-STORAGE FACILITY
ROOSEVELT TRAIL
NAPLES, MAINE

Responsible Party

Owner: Old Sour Holdings, LLC
79 Lewis Road
Naples, Maine 04055

The owners are responsible for the maintenance of all stormwater management structures and related site components and the keeping of a maintenance log book with service records. Records of all inspections and maintenance work performed must be kept on file with the owner and retained for a minimum of five years. The maintenance log will be made available to the Town upon request. At a minimum, the maintenance of stormwater management systems will be performed on the prescribed schedule.

The procedures outlined in this plan are provided as a general overview of the anticipated practices to be utilized on this site. In some instances, additional measures may be required due to unexpected conditions. *The Maine Erosion and Sedimentation Control BMP* and *Stormwater Management for Maine: Best Management Practices* Manuals published by the MDEP should be referenced for additional information.

During Construction

1. **Inspection and Corrective Action:** It is the contractor's responsibility to comply with the inspection and maintenance procedures outlined in this section. Inspection shall occur on all disturbed and impervious areas, erosion control measures, material storage areas that are exposed to precipitation, and locations where vehicles enter or exit the site. These areas shall be inspected at least once a week as well as 24 hours before and after a storm event and prior to completing permanent stabilization measures. A person with knowledge of erosion and stormwater control, including the standards and conditions in the permit, shall conduct the inspections.

2. **Maintenance:** Erosion controls shall be maintained in effective operating condition until areas are permanently stabilized. If best management practices (BMPs) need to be repaired, the repair work should be initiated upon discovery of the problem but no later than the end of the next workday. If BMPs need to be maintained or modified,

additional BMPs are necessary, or other corrective action is needed, implementation must be completed within seven calendar days and prior to any rainfall event.

3. **Documentation:** A report summarizing the inspections and any corrective action taken must be maintained on site. The log must include the name(s) and qualifications of the person making the inspections; the date(s) of the inspections; and the major observations about the operation and maintenance of erosion and sedimentation controls, materials storage areas, and vehicle access points to the parcel. Major observations must include BMPs that need maintenance, BMPs that failed to operate as designed or proved inadequate for a particular location, and location(s) where additional BMPs are needed. For each BMP requiring maintenance, BMP needing replacement, and location needing additional BMPs, note in the log the corrective action taken and when it was taken. The log must be made accessible to Town staff, and a copy must be provided upon request. The owner shall retain a copy of the log for a period of at least three years from the completion of permanent stabilization.

Houskeeping

1. **Spill prevention:** Controls must be used to prevent pollutants from construction and waste materials on site to enter stormwater, which includes storage practices to minimize exposure of the materials to stormwater. The site contractor or operator must develop, and implement as necessary, appropriate spill prevention, containment, and response planning measures.

2. **Groundwater protection:** During construction, liquid petroleum products and other hazardous materials with the potential to contaminate groundwater may not be stored or handled in areas of the site draining to an infiltration area. An "infiltration area" is any area of the site that by design or as a result of soils, topography and other relevant factors accumulates runoff that infiltrates into the soil. Dikes, berms, sumps, and other forms of secondary containment that prevent discharge to groundwater may be used to isolate portions of the site for the purposes of storage and handling of these materials. Any project proposing infiltration of stormwater must provide adequate pre-treatment of stormwater prior to discharge of stormwater to the infiltration area, or provide for treatment within the infiltration area, in order to prevent the accumulation of fines, reduction in infiltration rate, and consequent flooding and destabilization.

3. **Fugitive sediment and dust:** Actions must be taken to ensure that activities do not result in noticeable erosion of soils or fugitive dust emissions during or after construction. Oil may not be used for dust control, but other water additives may be considered as needed. A stabilized construction entrance (SCE) should be included to minimize tracking of mud and sediment. If off-site tracking occurs, public roads should be swept immediately and no less than once a week and prior to significant storm events. Operations during dry months, that experience fugitive dust problems, should

wet down unpaved access roads once a week or more frequently as needed with a water additive to suppress fugitive sediment and dust.

4. **Debris and other materials:** Minimize the exposure of construction debris, building and landscaping materials, trash, fertilizers, pesticides, herbicides, detergents, sanitary waste and other materials to precipitation and stormwater runoff. These materials must be prevented from becoming a pollutant source.

5. **Excavation de-watering:** Excavation de-watering is the removal of water from trenches, foundations, coffer dams, ponds, and other areas within the construction area that retain water after excavation. In most cases the collected water is heavily silted and hinders correct and safe construction practices. The collected water removed from the ponded area, either through gravity or pumping, must be spread through natural wooded buffers or removed to areas that are specifically designed to collect the maximum amount of sediment possible, like a cofferdam sedimentation basin. Avoid allowing the water to flow over disturbed areas of the site. Equivalent measures may be taken if approved by the Department.

6. **Authorized Non-stormwater discharges:** Identify and prevent contamination by non-stormwater discharges. Where allowed non-stormwater discharges exist, they must be identified and steps should be taken to ensure the implementation of appropriate pollution prevention measures for the non-stormwater component(s) of the discharge. Authorized non-stormwater discharges are:
(a) Discharges from firefighting activity;
(b) Fire hydrant flushings;
(c) Vehicle washwater if detergents are not used and washing is limited to the exterior of vehicles (engine, undercarriage and transmission washing is prohibited);
(d) Dust control runoff in accordance with permit conditions and Appendix (C)(3);
(e) Routine external building washdown, not including surface paint removal, that does not involve detergents;
(f) Pavement washwater (where spills/leaks of toxic or hazardous materials have not occurred, unless all spilled material had been removed) if detergents are not used;
(g) Uncontaminated air conditioning or compressor condensate;
(h) Uncontaminated groundwater or spring water;
(i) Foundation or footer drain-water where flows are not contaminated;
(j) Uncontaminated excavation dewatering (see requirements in Appendix C(5));
(k) Potable water sources including waterline flushings; and
(l) Landscape irrigation.

7. **Unauthorized non-stormwater discharges:** Approval from the Town does not authorize a discharge that is mixed with a source of non-stormwater, other than those discharges in compliance with Section 6 above. Specifically, the Town's approval does not authorize discharges of the following:

(a) Wastewater from the washout or cleanout of concrete, stucco, paint, form release oils, curing compounds or other construction materials;
(b) Fuels, oils or other pollutants used in vehicle and equipment operation and maintenance;
(c) Soaps, solvents, or detergents used in vehicle and equipment washing; and
(d) Toxic or hazardous substances from a spill or other release.

Post construction

1. **Inspection and Corrective Action:** All measures must be maintained by the owner in effective operating condition. A person with knowledge of erosion and stormwater control, including the standards and conditions of the permit, shall conduct the inspections. The following areas, facilities, and measures must be inspected, and identified deficiencies must be corrected. Areas, facilities, and measures other than those listed below may also require inspection on a specific site.

   A. **Vegetated Areas:** Inspect vegetated areas, particularly slopes and embankments, early in the growing season or after heavy rains to identify active or potential erosion problems. Replant bare areas or areas with sparse growth. Where rill is evident, armor the area with an appropriate lining or divert the erosive flows to on-site areas able to withstand the concentrated flows.

   B. **Ditches, Swales, and Open Channels:** Inspect ditches, swales, and other open channels in the spring, late fall, and after heavy rains to remove any obstructions to flow, remove accumulated sediments and debris, control vegetative growth that could obstruct flow, and repair any erosion of the ditch lining. Vegetated ditches must be mowed at least annually or otherwise maintained to control the growth of woody vegetation and maintain flow capacity. Any woody vegetation growing through riprap linings must also be removed. Repair any slumping side slopes as soon as practicable. If the ditch has a riprap lining, replace riprap on areas where any underlying filter fabric or underdrain gravel is showing through the stone or where stones have dislodged. The channel must receive adequate routine maintenance to maintain capacity and prevent or correct any erosion of the channel's bottom or side slopes.

   C. **Culverts:** Inspect culverts in the spring, late fall, and after heavy rains to remove any obstructions to flow; remove accumulated sediments and debris at the inlet, at the outlet, and within the conduit; and to repair any erosion damage at the culvert's inlet and outlet.

   D. **Catch Basins:** Inspect and, if required, clean out catch basins at least once a year, preferably in early spring. Clean out must include the removal and legal disposal of any accumulated sediments and debris at the bottom of the basin, at any inlet grates, at any inflow channels to the basin, and at any pipes between basins. If the

basin outlet is designed to trap floatable materials, then remove the floating debris and any floating oils (using oil-absorptive pads).

E. **Infiltration Basins:** Inspect soil filter after every major storm event for the first six months to ensure proper function. Thereafter, the filter should be inspected twice per year to ensure that water in the basin drains within 24 hours. If water does not drain within 24-hours, corrective action should be taken to loosen/rototill the surface material. Snow removed from any on-site or off-site areas may not be stored over an infiltration basin. The portions of roadway draining to infiltration basins should not be treated with salt.

F. **Regular Maintenance:** If the driveways around the storage units are eventually paved, clear accumulations of winter sand along driveways once a year, preferably in the spring. Accumulations on pavement may be removed by pavement sweeping. Accumulations of sand along pavement shoulders may be removed by grading excess sand to the pavement edge and removing it manually or by a front-end loader.

G. **Documentation:** Keep a log (report) summarizing inspections, maintenance, and any corrective actions taken. The log must include the date on which each inspection or maintenance task was performed, a description of the inspection findings or maintenance completed, and the name of the inspector or maintenance personnel performing the task. If a maintenance task requires the clean-out of any sediments or debris, indicate where the sediment and debris was disposed after removal. The log must be made accessible to Town staff upon request. The permittee shall retain a copy of the log for a period of at least five years from the completion of permanent stabilization. Attached is a sample log.

Duration of Maintenance

Perform maintenance as described.

MAINTENANCE LOG

SELF-STORAGE FACILITY
NAPLES, MAINE

The following stormwater management and erosion control items shall be inspected and maintained as prescribed in the Maintenance Plan with recommended frequencies as identified below. The owner is responsible for keeping this maintenance log on file for a minimum of five years and shall provide a copy to the Town upon request. Inspections are to be performed by a qualified third party inspector and all corrective actions shall be performed by personnel familiar with stormwater management systems and erosion controls.

Maintenance Item	Maintenance Event	Date Performed	Responsible Personnel	Comments
Vegetated Areas	Inspect slopes and embankments early in Spring.			
Ditches, swales, and other open channels	Inspect after major rainfall event producing 1" of rain in two hours.			
	Inspect for erosion or slumping & repair			
	Mowed at least annually.			
Culverts	Inspect semiannually and after major rainfall.			
	Repair erosion at inlet or outlet of pipe.			
	Repair displaced riprap.			
	Clean accumulated sediment in culverts when >20% full.			
Catch Basins	Inspect to ensure that structure is properly draining.			
	Remove accumulated sediment semiannually.			
	Inspect grates/inlets and remove debris as needed.			
Infiltration Basins	Check after each rainfall event to ensure that pond drains within 24 hours.			
	Inspect semiannually for erosion or sediment accumulation and repair as necessary.			
Regular Maintenance	Clear accumulation of winter sand in paved areas annually.			